港燈 HK Electric

130+ 推動永續未來 Powering for Sustainability

Guide to Connection of Supply

(7th Edition)

FOREWORD

HK Electric is committed to providing our customers with excellent services and a reliable and quality electricity supply. Since the first edition of this "Guide to Connection of Supply" (GCS) in 1993, it has been one of the major references in the industry to help customers and electrical contractors to prepare the electrical installations for receiving electricity supply. As a result of the implementation of the Code of Practice for the Electricity (Wiring) Regulations 2020 edition, this seventh edition of GCS has incorporated the latest interface requirements and the relevant changes due to technical advancements and higher customer expectations. For better reading, extensive use of flow-charts and drawings are adopted in the new edition.

The new GCS has ten chapters. The first three chapters explain the procedures of application for electricity supply in details. Chapters 4, 5 and 6 disseminate the latest interface requirements between a customer's installation and our system such as protection and metering requirements. Chapters 7 introduces our latest one-stop services and provide the guidelines for setting up EV charging facilities. Chapter 8 provides a comprehensive departure check lists with examples of acceptable arrangements for some common departures to assist customers and electrical contractors to inspect their installation and rectify the departures prior to HK Electric inspection. Chapter 9 provides reference materials on enhancing the supply reliability and power quality, while the last chapter introduces other customer services provided by HK Electric.

It is necessary to note that the GCS is for reference only and does not supersede any of the existing rules and regulations. The GCS may be updated as and when new methods or new installation techniques emerge. You can always find the latest softcopy of GCS on our website (www.hkelectric.com), or obtain a printed copy at our Customer Centre at 9/F., Electric Centre, 28 City Garden Road, North Point, Hong Kong.

If you have any suggestion on the GCS contents, please write to us or contact our Customer Installation Department so that we can further improve our services. Thank you for your continuous support.

Compiled by
Customer Installation Department,
Customer Services Division

GCS 1st Edition : 03/1993
GCS 2nd Edition: 12/1995
GCS 3rd Edition: 08/1999
GCS 4th Edition: 05/2005
GCS 5th Edition: 05/2011
GCS 6th Edition: 09/2017
GCS 7th Edition: 12/2021

CLAUSE	CONTENTS	PAGE NO.

CONTENTS		**I**
ABBREVIATION		**VI**
LEGEND		**VII**
CHAPTER 1	**INTRODUCTION**	
1	Objective of The Guide	1.1
2	Precedence of Supply Rules Over The Guide	1.1
3	Limit of The Guide	1.1
4	Interpretation	1.2
CHAPTER 2	**HOW TO APPLY FOR ELECTRICITY**	
1	Electricity Supplied by HK Electric	2.1
2	Application	2.1
3	Deposit	2.3
4	Approved Loading	2.3
5	Registered Electrical Workers/Contractors (REWs/RECs)	2.4
6	Electrical Installation Inspection (Not Applicable to Transfer of Account)	2.4
7	Procedures on Termination of Electricity Account and Refund of Deposit	2.6
8	Prevention of Bribery	2.6
9	Useful Addresses and Telephone Numbers	2.7
10	Schedule of Drawing - How to Apply for Electricity	2.7
CHAPTER 3	**INFORMATION ON APPLICATION FOR SUPPLY**	
1	Application for Supply to New Building	3.1
2	Application for Supply to Village Houses on Hong Kong Island or 3-Storey Houses on Lamma Island	3.2
3	Application for Supply (New or Additional) at Existing Building	3.2

4	Application for Temporary Supply to Construction Sites	3.3
5	Application for Supply to Squatters	3.5
6	Application for Supply to Pontoon/Vessel/Boat	3.6
7	Application for Supply to Hawker Stalls	3.7
8	Temporary Supply for Filming/Decoration	3.7
9	Application for Transfer	3.8
10	Additional Information	3.8
11	Schedule of Drawings - Information on Application for Supply	3.9

CHAPTER 4 **PROTECTION REQUIREMENTS**

1	General	4.1
2	Customer HV Main Switch	4.1
3	Customer LV Main Switch	4.2
4	Protection Scheme for Main Switch	4.2
5	Auxiliary Supply for Protection Scheme and Relay	4.2
6	Typical Protection Scheme for LV Main Switch Directly Fed by HK Electric Transformer	4.3
7	Schedule of Drawings - Protection Requirements	4.3

CHAPTER 5 **METERING REQUIREMENTS**

1	General	5.1
2	Interference on Meter Seals	5.1
3	Type of Meters to be Installed	5.1
4	Metering Position	5.1
5	General Requirements for Installation	5.2
6	General Requirements of LV Tariff Meters	5.3
7	Special Requirements for 11-kV/22-kV Metering Scheme	5.5
8	General Requirements of Current Transformer Chamber for Accommodation of Metering C.T.s & Voltage Fuses	5.5
9	Requirements for Meter Leads and Meter Tails	5.7
10	Ferrule Nos. for 12-core Cable	5.8

11	Special Summation Metering Scheme	5.8
12	Removal of Meters and Related Services from a Building Due to Demolition	5.8
13	Metering Arrangement for Electric Vehicle Charging Facilities	5.9
14	Fire Resisting Enclosure (FRE) for Tariff Meters	5.9
15	Requirements for Tariff Meter Communication (TMC) Infrastructure Provisions in New Buildings/Existing Buildings with Major Renovation	5.10
16	Schedule of Drawings - Metering Requirements	5.11

CHAPTER 6 **GUIDELINES ON DESIGN OF ELECTRICAL INSTALLATION**

1	Introduction	6.1
2	Interconnection Facilities of Customer's Installation	6.2
3	Customer 11-kV/22-kV Main Switch	6.6
4	Nomenclature of Customer's 11-kV/22-kV Apparatus	6.7
5	Customer LV Main Switch	6.8
6	Changeover Arrangement for Fire Services Installation Supplied from the Same Source	6.10
7	Rising Mains Installation	6.10
8	Electrical Design for Residential Flats	6.11
9	Electrical Design for Restaurants	6.12
10	Earthing	6.13
11	Limit on Length of Customer's Interconnecting Installation	6.14
12	Electromagnetic Interference in Substations	6.14
13	Sequence of Inspections for Multi-Customer Installations	6.15
14	Supply Arrangement for Residential and Commercial Loads in a Building	6.15
15	Separation of Lighting Supplies for Department Store / Shopping Mall	6.16
16	Phase Identification	6.16

17	Check List for Customer's Schematic Wiring Diagram	6.17
18	Technical and Interface Requirements for Grid Connection of Renewable Energy Power System	6.29
19	Schedule of Drawings - Guidelines on Design of Electrical Installation	6.30
CHAPTER 7	**ELECTRIC VEHICLE CHARGING FACILITIES**	
1	Smart Power EV Charging Solution (SPECS)	7.1
2	Requirements for Electric Vehicle (EV) Charging Facilities	7.1
3	Schedule of Drawings – Electric Vehicle Charging Facilities	7.5
CHAPTER 8	**INSPECTION OF CUSTOMER'S INSTALLATION**	
1	General	8.1
2	Inspection Criteria	8.1
3	Departure Check Lists	8.1
CHAPTER 9	**HOW TO ENHANCE THE RELIABILITY & POWER QUALITY OF ELECTRICITY SUPPLY**	
1	Introduction	9.1
2	Supply Interruptions	9.1
3	Momentary Voltage Dips	9.6
4	Harmonics	9.10
5	Power Quality Centre	9.12
6	Schedule of Drawings – How to Enhance The Reliability & Power Quality of Electricity Supply	9.12

CHAPTER 10 **CUSTOMER SERVICES**

1	The Customer Centre	10.1
2	Telephone Enquiry Services	10.2
3	Account-by-Phone Service	10.3
4	Electricity-by-Phone Service	10.3
5	Electronic Services	10.4
6	Inspection Service	10.4
7	Collection of Tariff Metering Equipment	10.6
8	Request for Shutdown of HK Electric Supply	10.6
9	Advisory Service on Voltage Fluctuations	10.7
10	Advisory Service on Electromagnetic Interference	10.7
11	Load Factor and Power Factor Improvement	10.7
12	Mock Up Inspection Service	10.8
13	Advisory Service on Rewiring of Rising/Lateral Mains of Existing Buildings	10.8
14	Ambassador Service	10.9
15	Account Monitoring Service	10.9
16	Enterprise Advisor Service	10.9
17	Services for Small and Medium Enterprises (SME)	10.10
18	Smart Power Gallery	10.10

APPENDICES

Appendix A : Standard Forms
Appendix B : Useful Telephone Numbers
Appendix C : HK Electric District Boundaries

ABBREVIATION

AFFL	:	Above Finish Floor Level	離地面高度
B/B	:	Busbar	匯流排
Cct	:	Circuit	電路
C.T.	:	Current Transformer	電流互感器
D.P.	:	Double-Pole	雙極
E/F	:	Earth Fault	接地故障
HK Electric	:	The Hongkong Electric Co. Ltd.	香港電燈有限公司(港燈)
I.D.	:	Inner Diameter	內直徑
MCB	:	Miniature Circuit Breaker	微型斷路器
MCCB	:	Moulded Case Circuit Breaker	模制外殼斷路器
Max.	:	Maximum	最多, 最高, 最大
Min.	:	Minimum	最少, 最低, 最小
M.S.	:	Mild Steel	軟鋼
O/C	:	Overcurrent	過流
O.D.	:	Outer Diameter	外直徑
RCD	:	Residual Current Device	電流式漏電斷路器
REC	:	Registered Electrical Contractor	註冊電業承辦商
REW	:	Registered Electrical Worker	註冊電業工程人員
RM	:	Room	房間
S/S	:	Substation	電力分站
SW	:	Switch	開關
Tx	:	Transformer	變壓器
TP	:	Triple-Pole	三極
TP&N	:	Triple-Pole & Neutral	三極及中性
V.T.	:	Voltage Transformer	電壓互感器
WCC	:	Work Completion Certificate	完工證明書
1-Ø	:	Single-Phase	單相
3-Ø	:	Three-Phase	三相
4-P	:	Four-Pole	四極

LEGEND

	HK Electric 11-kV/380-V or 22-kV/380-V transformer
	HK Electric service cutout
	Circuit breaker
	Isolator
	Switch
	HK Electric metering C.T.
	Metering C.T. cum link box/chamber complete with C.T.s
	HK Electric tariff meter
	4-pole changeover
	Contactor
G	Generator
	3-phase 4-wire
	1-phase 2-wire
	Distribution board
	Fuse
	Link

CHAPTER 1

INTRODUCTION

CHAPTER 1

INTRODUCTION

1.1 Objective of The Guide

The Guide aims to achieve the following:

1. To explain the application procedure in greater details.

2. To outline the basic interface requirement between customer's installation and HK Electric supply equipment.

3. To elaborate those major technical requirements of HK Electric Supply Rules.

4. To highlight, in simple terms and pictorial forms, those important wiring installation interface requirements which are often overlooked by registered electrical worker/contractor.

1.2 Precedence of Supply Rules Over The Guide

Under all circumstances, HK Electric Supply Rules shall take precedence over the Guide.

1.3 Limit of The Guide

1. The Guide shall not be construed as part of the terms and conditions of the Supply Agreement.

2. The Guide does not cover details of customer’s installation requirements. The installation shall comply with the HK Electric Supply Rules, the latest edition of Code of Practice for the Electricity (Wiring) Regulations and other relevant Government Ordinances and Regulations.

3. The materials contained in the Guide represent the prevailing requirements and/or interpretations at the time of printing. HK Electric reserves the right at any time in its absolute discretion to revise the Guide without further notice. It is the responsibility of the customer and/or his registered electrical worker/contractor to confirm or clarify with HK Electric in case of doubt.

1.4 Interpretation

In the Guide to Connection of Supply, unless inconsistent with the context, words denoting persons include corporations and firms, words denoting the masculine gender include the feminine gender and the neuter gender, and words denoting the singular number include the plural number and vice versa.

CHAPTER 2

HOW TO APPLY FOR ELECTRICITY

CHAPTER 2

HOW TO APPLY FOR ELECTRICITY

2.1 Electricity Supplied by HK Electric

We supply electricity to Hong Kong Island and Lamma Island.

The electricity supplied is usually at a voltage of 220 V (1-phase 2-wire) or 380 V (3-phase 4-wire) and at a frequency of 50 Hz.

For larger customers, supplies at 11 kV (3-phase 3-wire) or 22 kV (3-phase 3-wire) may be provided at the discretion of HK Electric. HK Electric reserves the right to determine the supply voltage for an application. A customer requiring a high voltage supply to meet his requirements should apply in writing to HK Electric as early as possible in the planning stage.

2.2 Application

1. Information about the procedures for Application for Supply can be obtained by calling our 24-hour Account-by-Phone Service (APS) at 2887 3466, or contacting our Customer Services Executives at 2887 3411, or via our website at www.hkelectric.com. Application procedures for general installation is shown in Drg. No. GCS/2/01.

2. Customers are advised to pay particular attention to Clauses 2.4 and 2.5 for "Approved Loading" and "Registered Electrical Workers/Contractors (REWs/RECs)" respectively.

3. Application Form For Supply/Transfer is obtainable free of charge by one of the following ways:

   a. Visiting our Customer Centre at 9/F., Electric Centre, 28 City Garden Road, North Point, Hong Kong (Near Fortress Hill MTR Station).

   b. Calling our Customer Services Executives at 2887 3411.

   c. Downloading from our website www.hkelectric.com.

   Our Supply Rules give the commercial and technical terms and conditions upon which we supply electricity. Copies of our Supply Rules are obtainable free of charge by visiting our Customer Centre or downloading from our website.

4. Free assistance on completing the application form is available

   a. at Customer Centre

   b. by calling our Customer Services Executives at 2887 3411

5. The duly completed and signed Application Form For Supply/Transfer should be submitted as early as possible by one of the following ways:

   a. In person or by mail to our Customer Centre

   b. By fax to 2510 7667

6. We also accept phone application or application by electronic form available from our website www.hkelectric.com for new supply and transfer of account.

7. The time required to process an application depends on its type of application. Normally, appointment for installation inspection for a new supply application can be provided within two working days if the existing supply system is adequate for the application. However, a longer time of notice is required for supply to a new building, construction site, squatter, and for supply of larger loading, say, three-phase supply, etc. (please refer to Chapter 3 for details). For transfer of account not requiring installation inspection, connection of supply can be arranged within the next working day.

8. If supply is not sufficient to meet the demand or where supply is not available, HK Electric will install extra equipment. In that case, the supply lead time may be longer.

9. If the supply equipment has to occupy Government Lands, Highways or private property, official consent/permits are required before we could proceed with the equipment installation. Customers should be aware that the supply lead time will be beyond the control of HK Electric but we shall provide the best estimated supply available time to the customer from time to time.

10. The customer will be given an Application No. for future correspondence. Please quote the Application No. for any future enquiries regarding the application.

11. Customers may be required to pay a service charge for provision of supply.

2.3 Deposit

1. A deposit is required as security for future use of electricity.

2. The required deposit is equivalent to 60 days estimated consumption, and the estimation is based on the loading of appliances and the main switch rating.

3. An annual interest will be paid to customers for cash deposits at the same rate as HSBC's interest rate for savings accounts with an account balance of $10,000 - $149,999. Interest ceases to be payable upon termination or transfer of the account.

2.4 Approved Loading

1. In accordance with the Code of Practice for the Electricity (Wiring) Regulations Code 18B, any person who wishes to have his electricity supply increased over and above the approved loading, or extended beyond the premises to which the supply is originally intended, should obtain prior approval from the electricity supplier concerned before any alteration or addition is carried out.

2. In accordance with the Code of Practice for the Electricity (Wiring) Regulations Code 18A(c), in the case of an alteration or addition to an installation which is connected to rising mains, the owner of the installation should, before commencing any alteration or addition, obtain agreement from the owner of the rising mains by completing form "Confirmation of Agreement from Owner of Rising Mains for Connection of Electrical Installation with an Increased Current Demand" (C.I. 140) provided by Electricity Supplier if the new current demand of the installation after the alteration or the addition will exceed the existing approved loading before the alteration or addition is carried out on the installation.

3. For installations taking supply directly from HK Electric supply point, a standard enquiry and reply form (C.I. 141) shall be used for enquiry of approved loading of the installation.

4. Forms C.I. 140 and C.I. 141 are available from our 24-hour Electricity-by -Phone Service at 2887 3838, our website www.hkelectric.com or our Customer Centre.

2.5 Registered Electrical Workers/Contractors (REWs/RECs)

1. Under the current legislation,

   a. No person shall do personally or offer or undertake to do electrical work personally unless he is a registered electrical worker, who is entitled by his certificate to do the work.

   b. No person shall do business as an electrical contractor or contract to carry out electrical work unless he is a registered electrical contractor.

   c. A registered electrical contractor shall not employ a person other than a registered electrical worker to do electrical work except as provided in Section 32 of the Electricity Ordinance.

   Failing any one of the above may subject to fine and imprisonment.

2. We do not have nominated registered electrical contractors/workers and the customer is advised that any registered electrical contractor/worker purporting to represent us does so without authority.

2.6 Electrical Installation Inspection (Not Applicable to Transfer of Account)

1. Under the Electricity Ordinance, HK Electric will, upon receipt of an application for electricity supply, carry out inspection to satisfy that the installation is safe before supply is connected.

2. The inspection is in accordance with the Electricity Ordinance and the technical requirements of HK Electric Supply Rules.

3. The preferred inspection date should be at least ONE working day after the date of application.

4. To facilitate inspection, please present the following documents before or at the time of inspection:

   a. The REWs of the appropriate grade should be present on site with a copy of duly completed Work Completion Certificate (WCC). No inspection will be conducted if a copy of WCC for the electrical work is not provided.

   b. For address (including commercial podium) which is difficult to identify on site, document for proof of occupancy, say, assignment, title deed or tenancy agreement, letter from solicitor, is required.

5. If above ground work is required for our inspection and meter installation work, working platform or platform ladder complying with the latest statutory requirements must be provided by the site responsible personnel at site such that the work can be carried out safely.

6. If work inside false ceiling is required for our inspection, a task-specific risk assessment should be conducted by a competent person assigned by REC or the owner of fixed electrical installation to identify all potential hazards associated with work inside false ceiling before the commencement of work and suitable means of access/means of support/working platforms complying with the latest statutory requirements should be provided by site responsible personnel at site.

7. If the installation is found to be substantially incomplete or defective, a report will be issued to the customer/REC/REW on site immediately after the inspection. A copy of the report and a notification letter will be sent to the correspondence address TWO working days after every inspection. Further, the customer/REC/REW can obtain a copy of the report by using Electricity-by-Phone Service (EPS) at 2887 3838.

8. Upon receipt of the inspection report, the customer/REC/REW should clear the departures and arrange a re-inspection date.

9. Electricity will not be connected until all outstanding departures are satisfactorily cleared.

10. If the installation is found connected to electricity supply prior to a satisfactory inspection by HK Electric, it is liable to be disconnected immediately, and in such circumstance the customer will be liable to prosecution under the Electricity Ordinance and/or the Theft Ordinance.

11. Where meter installation is necessary before connection of supply, meter will normally be installed immediately upon satisfactory inspection of the electrical installation.

12. All re-inspection fees will be summed up and debited against the customer's account upon completion of inspection and power on to the customer premises. Alternatively, REC/REW may apply for payment of re-inspection fees on behalf of the customer by completing Form C.I. 142.

13. Customer/REC/REW may request to have a fax or SMS notification of confirmation of the inspection appointment time band. They can also opt for SMS e-alert notification of inspection results and confirmation of their electricity supply connection.

2.7 Procedures on Termination of Electricity Account and Refund of Deposit

1. Termination of Account:

   a. In most of the cases, the registered customer may call 2887 3411 or complete the electronic form on our website www.hkelectric.com for processing.

   b. The registered customer may also send a letter or an "Application for Termination of Electricity Account" form to Customer Centre by post or by fax to 2510 7667.

   c. Forms are available

      - at Customer Centre

      - by downloading from our website www.hkelectric.com

   d. An account will be automatically finalized on the effective transfer date of an application for transfer from a new customer.

   e. The registered customer is liable for all outstanding charges of an account as long as the account remains in his name.

2. Refund of Deposit:

   Deposit can be refunded after account termination. Please refer to our “Supply Rules” for details.

2.8 Prevention of Bribery

No payment of any kind for any service, including application forms, is required by HK Electric except against a bill or letter issued by HK Electric. No employee of HK Electric may solicit or accept any advantage, which includes any gift, loan, fee, tips, reward or commission for any of the services of the Company performed by Company employees to or for customers. Any person offering such an advantage to an employee of the Company is committing an offence under the Prevention of Bribery Ordinance.

2.9 Useful Addresses and Telephone Numbers

For application for supply; transfer of accounts & bill enquiries	Customer Centre, 9/F, Electric Centre, 28 City Garden Road, North Point. (Near Fortress Hill MTR Station) Tel. No. 2887 3411 Fax No. 2510 7667 Email Address : cs@hkelectric.com
For installation inspection enquiries and technical advice	Customer Installation Enquiry Counter, 9/F, Electric Centre, 28 City Garden Road, North Point. (Near Fortress Hill MTR Station) Tel. No. 2887 3455 Fax No. 2510 7721
For Emergency Reporting (24-hour service)	Tel. No. 2555 4999 (Chinese) 2555 4000 (English)
SMS Enquiry Service	Tel. No. 6681 3411
24-Hour Account-by-Phone Service	Tel. No. 2887 3466
24-Hour Electricity-by-Phone Service	Tel. No. 2887 3838
Website	www.hkelectric.com
Email Address	mail@hkelectric.com
Postal Address of HK Electric	G.P.O. Box 915, Hong Kong.

2.10 Schedule of Drawing - How To Apply For Electricity

Drawing No.	Drawing Title
GCS/2/01	Application Procedures for General Installation

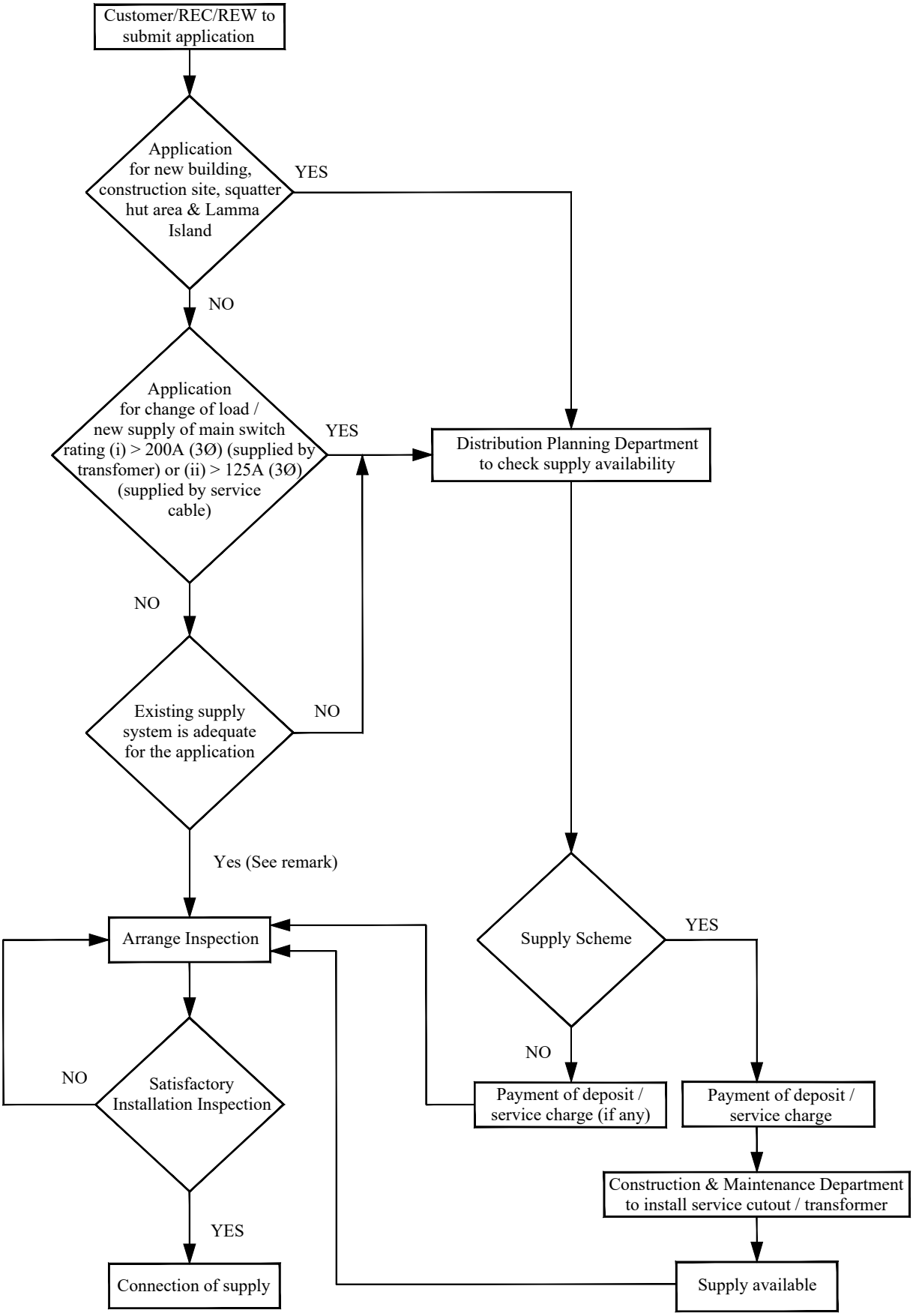

Remark:
The deposit amount will be included in the customer's first monthly electricity bill.

Drg. No. GCS/2/01

APPLICATION PROCEDURES FOR GENERAL INSTALLATION

CHAPTER 3

INFORMATION ON

APPLICATION FOR SUPPLY

CHAPTER 3

INFORMATION ON APPLICATION FOR SUPPLY

3.1 Application for Supply to New Building

1. Supply would, as decided by HK Electric, either be provided by establishing a customer's substation at the building or by direct cables from existing low voltage network.

2. Supply arrangement, requirements of substation/cable entry ducts and other facilities required for provision of supply would normally be agreed with the authorised architect/consultant responsible for the development at an early stage of the building construction.

3. For supply with establishment of a new substation, the substation should be constructed and handed over to HK Electric in a complete condition and other facilities (as required) provided. Installation work will take about six weeks to complete after acceptance of all these facilities provided by the developers, payment of service charge (if any) and after receipt of all necessary permits issued by relevant government authority/private land owner. [Please see Clause 3.10 (1 & 2)]

4. For supply from existing low voltage network, the cable entry ducts and other facilities as required should be provided. Installation work will take about four weeks to complete after acceptance of all these facilities, payment of service charge (if any) and after receipt of all necessary permits issued by relevant government authority/private land owner. [Please see Clause 3.10 (1 & 2)]

5. Under normal circumstances, the supply scheme will be prepared and service charge (if any) determined in about two weeks after receipt of formal application for supply. For exceptional cases where special type of equipment or complicated supply arrangements are involved, an additional two weeks may be needed for determination of service charge. [Please see Clause 3.10 (1 & 2)]

3.2 Application for Supply to Village Houses on Hong Kong Island or 3-Storey Houses on Lamma Island

1. Supply would normally be provided by direct cables from existing low voltage network. However, there would be some special cases where supply would be provided by low voltage overhead wires.

2. Formal application for supply should be submitted as early as possible. The applicant will be advised of HK Electric requirements of the cable entry ducts, weatherproof enclosure and/or other facilities in about four weeks upon receipt of the application.

3. Apart from preparation of the supply scheme, approval of excavation permit from District Lands Office will require about another three months. Should there be any private lot involved along the excavation route, written approval from all private lot owners must be received before the applicant is asked to pay the service charge required for provision of supply.

4. The cable entry ducts, weatherproof enclosure and/or other facilities as required should be provided. Installation work will take about four weeks to complete after acceptance of all these facilities, payment of service charge (if any) and receipt of all necessary permits issued by relevant government authority/private land owner. [Please see Clause 3.10 (1 & 2)]

3.3 Application for Supply (New or Additional) at Existing Building

1. It must not be assumed that such supply (even if it is a small supply or application for transfer) at existing building can be obtained at short notice because the existing supply system may have already been loaded to its capacity and need reinforcement.

2. For application of a very large supply, a new substation or extension of the existing substation at the building may be required. This will involve alteration of building plans and will have to be handled by authorised architect/consultant. The whole process of providing supply including negotiation of substation space, approval from relevant Government Authorities, construction/extension of substation, inspection and handing over of substation, commissioning of substation and connection of supply may take six months to a few years.

3. Application of smaller supply may also necessitate the installation of additional service cable or replacement of existing service cable supplying the building. The applicant will be advised of the supply situation, HK Electric requirements of the cable entry ducts and other facilities, and service charge required for provision of supply (if any) in about three weeks upon receipt of the application. The cable installation work will take about four weeks to complete after acceptance of all these facilities, payment of service charge (if any) and after receipt of all necessary permits issued by relevant government authority/private land owner. [Please see Clause 3.10 (1 & 2)]

4. The processing time will be much shorter if the application for supply does not require any reinforcement work by HK Electric.

5. It is always the customer's REC/REW responsibility to ensure that prior consent has been obtained from the building management and/or the owners incorporation of the building regarding connection of customer's new or additional load to the distribution system of the building and that connection of customer's new or additional installation will not cause overload to the distribution system of the building.

6. To help speed up the processing of application for supply, the applicants or their RECs/REWs are requested to complete Form DP1 to provide the information on Supply Number details from which the proposed electrical installation will be supplied.

7. The workflow and telephone contact list for application for additional load is shown in Drg. No. GCS/3/01.

3.4 Application for Temporary Supply to Construction Sites

1. HK Electric provides a one-stop service under **Smart Power for Construction Site** (www.hkelectric.com/SPCS-en) to timely provide electricity for construction sites to help reduce carbon emissions throughout the construction life cycle. By replacing diesel generators with grid-powered electricity supply, carbon emissions, air and noise pollution during construction period will be substantially reduced while saving energy cost. HK Electric also provides recommendations and services for further decarbonising construction including use of renewable energy, electric vehicle, and energy efficiency enhancement measures.

2. Customers are highly recommended contacting HK Electric at 2510 2701 or SPCS@hkelectric.com at the earliest possible stage of construction project (e.g. during plan submission to Buildings Department, building demolition/construction tender preparation stage, or hoarding design stage) to enable timely arrangement of adequate temporary site supply. Customers may also submit an Online Service Request Form (available at www.hkelectric.com/SPCS-en) requesting HK Electric one-stop service for arranging construction site temporary supply. Please refer to Drg. No. GCS/3/02 for the workflow of application for construction site temporary supply.

3. In general, supply will be provided either by establishing a transformer pillar at the site (for a requested load above 800 A three-phase) or by direct cables from existing low voltage network (for a requested load at 800 A three-phase or below) to the boundary of the site.

4. If the requested load cannot be supplied from existing low voltage network, a transformer pillar at the site will be required. The transformer pillar will be supplied and installed by HK Electric. To accommodate the pillar, a space of not less than 4 m x 4 m on levelled and stable ground free from flooding and landslip hazard with 1.6-m all-round clearance should be provided. Access to pillar should be freely available at all times and at least one side of the pillar should be along the periphery of the construction site. A customer's main switchroom adjacent to the transformer pillar should also be provided. The access to customer's main switchroom should be freely available at all times and should be at the periphery of the construction site. The low voltage connection will be by single-core cables.

5. For supply with establishment of a transformer pillar, the pillar foundation should be constructed and handed over to HK Electric in a complete condition and other facilities (as required) provided, and service charge required for provision of supply paid at least eight weeks before supply is required. The detailed requirements on the pillar foundation and access to the pillar are shown in Drg. No. GCS/3/11.

6. If the requested load can be supplied from existing low voltage network, a cable will be laid up to the boundary of the site. A weatherproof enclosure for housing service cutout and meter will be supplied by HK Electric but installed by the applicant. The applicant shall install the distribution facilities inside their own switch cubicle. In general, maximum two cables (each with a maximum supply capacity of 400 A three-phase) could be laid to the boundary of the site (at two different supply locations on customer's request) subject to actual low voltage network and site conditions.

7. For supply from existing low voltage network, the installation of weatherproof enclosure and provision of other facilities (such as cable joint bay/cable trench) will be inspected by HK Electric after payment of the service charge. The detailed arrangement of the weatherproof enclosure is shown in Drg. No. GCS/3/09. Cable installation will take about four weeks to complete after acceptance of all these facilities, and after receipt of all necessary permits issued by relevant government authority/private land owner. [Please see Clause 3.10 (1 & 2)]

8. Under normal circumstances, the scheme for supply from existing low voltage network will be prepared and service charge determined in about two weeks after receipt of formal Application Form for Supply/Transfer and location of weatherproof enclosure is agreed. For supply with establishment of a transformer pillar, the scheme will be prepared and service charge determined in about four weeks after receipt of formal application for supply and location of transformer pillar is agreed. [Please see Clause 3.10(1 & 2)]

9. The workflow of application for construction site temporary supply with the above typical arrangements is shown in Drg. No. GCS/3/02.

3.5 Application for Supply to Squatters

1. Supply to squatter hut would be either by central metering scheme or running overhead wires directly to customer's hut depending on the site conditions.

2. For supply to squatter by central metering scheme, the applicant for supply will be required to install a MCB board at the hut and run main wiring back to the pole with central metering cubicles and then fix a RCD complete with overcurrent protection as main switch at the metering cubicle to control the whole installation as per Drg. No. GCS/3/03.

3. For supply to squatter by direct overhead wires, the applicant for supply will be required to provide and install a weatherproof enclosure for housing HK Electric service cutout and meter.

4. Formal application for supply with a sketch indicating the exact location of hut where supply is required should be submitted as early as possible. Upon receipt of the application, HK Electric site engineer will conduct an inspection to see if there is any available central metering cubicle on site and advise the applicant accordingly.

5. If there is no central metering cubicle available and there is suitable space for erecting a central metering pole or adding new metering cubicle at existing pole, a scheme of providing a cubicle will be prepared in about four weeks after receipt of the application. If it involves erection of pole or cable laying in Government Land, District Lands Office will be approached for the issue of the permit, which will take about three months. After the necessary permit (if any) is received, the applicant will be advised of the supply arrangement, the location of the central metering pole and the service charge required for provision of supply. Installation work will take about four weeks to complete after payment of service charge (if any) and receipt of all necessary permits issued by relevant government authority/private land owner. [Please see Clause 3.10 (1 & 2)]

6. If there is no central metering cubicle available and there is no suitable space for adding a central metering cubicle, a scheme for providing supply by direct overhead wires will be prepared. The applicant will be advised of the supply arrangement, the location of the weatherproof enclosure to be provided and installed and the service charge (if required) for provision of supply. The installed weatherproof enclosure will be inspected by HK Electric after payment of the service charge/deposit. Installation work will take about four weeks to complete after payment of service charge (if any) and deposit and acceptance of the weatherproof enclosure. [Please see Clause 3.10 (1 & 2)]

3.6 Application for Supply to Pontoon/Vessel/Boat

1. Customer shall install a socket outlet of appropriate rating inside a weatherproof enclosure erected on shore for supplying electricity to pontoon/vessel/boat.

2. Supply would normally be provided by HK Electric LV service cable/cutout or central metering scheme.

3. The customer main switch shall be of a RCD of 30-mA operating current. It should be equipped with overcurrent protection and adequate short circuit breaking capacity.

4. The supply arrangement is shown in Drg. No. GCS/3/04.

5. Formal application for supply with a sketch indicating the exact location of the weatherproof enclosure and pontoon/vessel/boat where supply is required should be submitted as early as possible. Upon receipt of the application, HK Electric site engineer will conduct an inspection to see how to provide the supply and advise the applicant accordingly.

3.7 Application for Supply to Hawker Stalls

1. Applicant for supply to a stall should submit to HK Electric with the following documents:

   a. A copy of his licence issued by Food and Environmental Hygiene Department (FEHD)

   b. A no-objection letter from FEHD on the installation or connection of any electrical wirings or electrical equipment for his hawking purpose.

   c. A drawing showing his approved licensed area and location.

2. Supply would normally be provided by direct cables from existing LV network. The applicant is required to install a weatherproof enclosure within his licensed area to house HK Electric equipment with the door and window for meter reading facing footpath or public access.

3. The scheme for supply will be prepared and service charge determined in about three weeks after receipt of formal application for supply and the required documents. Cable installation will take about four weeks to complete after receipt of service charge from the applicant, acceptance of the required weatherproof enclosure and receipt of all necessary excavation permits issued by relevant government authority. [Please see Clause 3.10 (1 & 2)]

3.8 Temporary Supply for Filming/Decoration

1. Unmetered Temporary Supply for Filming

   Unmetered temporary supply for say, filming purpose, may be considered if the supply required lasts not more than 3 days. However, customer must comply with the requirements of the Supply Rules and the latest edition of the Code of Practice for the Electricity (Wiring) Regulations and provide a copy of Work Completion Certificate prior to connection of supply. The installation shall be protected by a residual current device complete with overcurrent protection main switch at the connection of supply.

2. Metered Temporary Supply for Decoration/Renovation

   Unauthorised extension from communal installation for decoration/ renovation is extremely dangerous and therefore is strictly forbidden. Customer can apply for temporary supply for decoration/renovation. The installation shall be protected by a residual current device complete with overcurrent protection main switch at the connection of supply.

3.9 Application for Transfer

1. We require one working day advance notice to process transfer of account. For most of the cases, we accept phone application/application by electronic form available from our website www.hkelectric.com for transfer and the process can be completed the next working day. A meter reading will be taken on the specified transfer date after which the customer will be responsible for the electricity consumption of the account. In case the customer has already occupied the address for a period of time, the date of the last monthly meter reading would be used in the transfer of account. The meter reading date is shown in the monthly electricity bill.

2. The completed Application Form For Supply/Transfer can also be returned to our Customer Centre by post or in person or by fax to 2510 7667. HK Electric will inform the customer of the deposit amount by letter.

3. No service charge is required for an application for transfer of account.

4. For details of deposit amount for a transfer of account, please call our Customer Services Executives at 2887 3411 during office hours.

5. When the transfer of account has been completed, the account of the former registered customer will be closed and the deposit will normally be ready for refund.

3.10 Additional Information

1. The time scales mentioned in the above sections are for indication only and HK Electric is not committed to provide supply by any prescribed date although every effort will be made to provide supply as early as possible.

2. The actual time needed to plan and install any plant required for provision of a supply depends on many factors such as the network situation, the working condition on site, availability of necessary permits issued by relevant government authority/private land owner (Excavation Permit, Government Lands Permit, Hong Kong Police Force Roadworks Advice, Construction Noise Permit and written approval from private land owners), etc.

   Should there be any delay in provision of cable entry ducts and other facilities as required, HK Electric would not be able to complete the required excavation work within the period co-ordinated with other utility undertakers and approved by the relevant government authority and this could lead to a long delay in provision of supply due to the imposed restrictions on extension or re-application of excavation permit. Please refer to the leaflet, "Information on Application for Excavation Permit" as shown in Drg. No. GCS/3/26, prepared by HK Electric for more information.

3. If it is necessary to install any plant required for provision of supply, a Planning Number will be assigned to the scheme. The applicant or REC/REW should quote the Planning Number or the Application Number when making any enquiries regarding the supply.

3.11 Schedule of Drawings - Information on Application for Supply

Drawing No.	Drawing Title
GCS/3/01	Workflow and Telephone Contact List for Application of Additional Load
GCS/3/02	Workflow of Application for Construction Site Temporary Supply
GCS/3/03	Squatter Hut Central Metering Scheme (P274/94/R-1)
GCS/3/04	Typical Supply Arrangement for Pontoon/Vessel/Boat
GCS/3/05	Requirements for Service Cutout (LV RMU Type) in New Building/Premises (P427/99/R-8) (Total 2 sheets)
GCS/3/06	Details of Cable Entry Facilities in Existing Building for Cutout Installation (P53/89/R-2)

GCS/3/07	Space Requirements for 400-A Service Cutout in Existing Building and Locations without Switchroom (Switch Type and with Disconnection Link) (P213/92/R-5)
GCS/3/08	Typical Details of Fire Resisting Enclosure for HK Electric Service Cutout Under the Fire Safety (Commercial Premises) Ordinance or Fire Safety (Buildings) Ordinance (P707/11/R-1)
GCS/3/09	Installation of Mild Steel Weatherproof Enclosure for Site Services (up to 400 A) (P661/08) (Total 3 sheets)
GCS/3/10	Space Requirements for Stainless Steel Weather-proof Enclosure for Village House on Lamma Island (P72/89/R-8)
GCS/3/11	Transformer Pillar Foundation (For T.P. in Construction Site with RTU) (P505/00/R-2)
GCS/3/12	Typical Layout for 1 - Tx. Substation with HV Cable Pit (P512/00/R-9) (Total 9 sheets)
GCS/3/13	Typical Layout for Twin Transformer Substation with HV Cable Pit (P584/03/R-3) (Total 4 sheets)
GCS/3/14	Typical Layout for Single Transformer First Level Substation with HV & LV Compartments (P381/98/R-6) (Total 6 sheets)
GCS/3/15	Bund Wall and Flood Gate for Distribution Substation (P806/19) (Total 2 sheets)
GCS/3/16	Details of LV Transit Block at Mid Level (P314/96/R-3)
GCS/3/17	Arrangement for Single-Core Cables Connected to HK Electric Substation (Customer Main Switch Not Exceeding 2250 A) (P31/88/R-6)
GCS/3/18	Typical Design of Working Platform at Cable Shaft / Cable Compartment for First Level Substation (P605/04/R-4)
GCS/3/19	Earthing Bracket for New Substation (P574/02/R-2)

GCS/3/20	Substation Main Supply & Schematic Diagram (P561/01/R-10)
GCS/3/21	Typical Arrangement of Cable Entry Ducts in Substation (P627/05/R-1) (Total 2 Sheets)
GCS/3/22	Typical Arrangement of Cables and Cable Cleats in Riser Duct (Vertical Height ≤ 7 Metres) (P671/08/R-3) (Total 2 sheets)
GCS/3/23	Typical Arrangement of Cables and Cable Cleats in Riser Duct for Upper Floor Substation or Basement Substation with Level Difference Exceeding 7 Metres (P666/08/R-4) (Total 2 sheets)
GCS/3/24	High Level Hazard Zone (P346/97)
GCS/3/25	Substation Louvres Details (P638/06/R-1)
GCS/3/26	Information on Application for Excavation Permit (Total 2 sheets)
GCS/3/27	Mild Steel Weatherproof Enclosure for Site Services up to 100 A 3-Phase (P630/06/R-2) (Total 4 sheets)
GCS/3/28	Conditions on Acceptance of Attaching External Decorative Louvres / Cladding to Substation Door or Additional Decorative Door in Front of Substation Door of Ground Floor Substation (P753/14/R1)
GCS/3/29	Requirements on Fire Resisting Door for Substations (P339/97/R-7)
GCS/3/30	Requirements of Precast Reinforced Concrete Cover (P722/12/R-1)
GCS/3/31	Anchoring Eye and Facilities for First Level Substation (P342/97/R-3) (Total 2 sheets)
GCS/3/32	Arrangement for Tariff Meter Communication (TMC) Termination Box (P383/98/R-6) (Total 2 sheets)

GCS/3/33	Mild Steel Weather-proof Enclosure for Single-Phase Supply (P655/07/R-3)
GCS/3/34	Mild Steel Weather-proof Enclosure for Single-Phase Supply to Hawker Stall (P717/12/R-3) (Total 2 sheets)

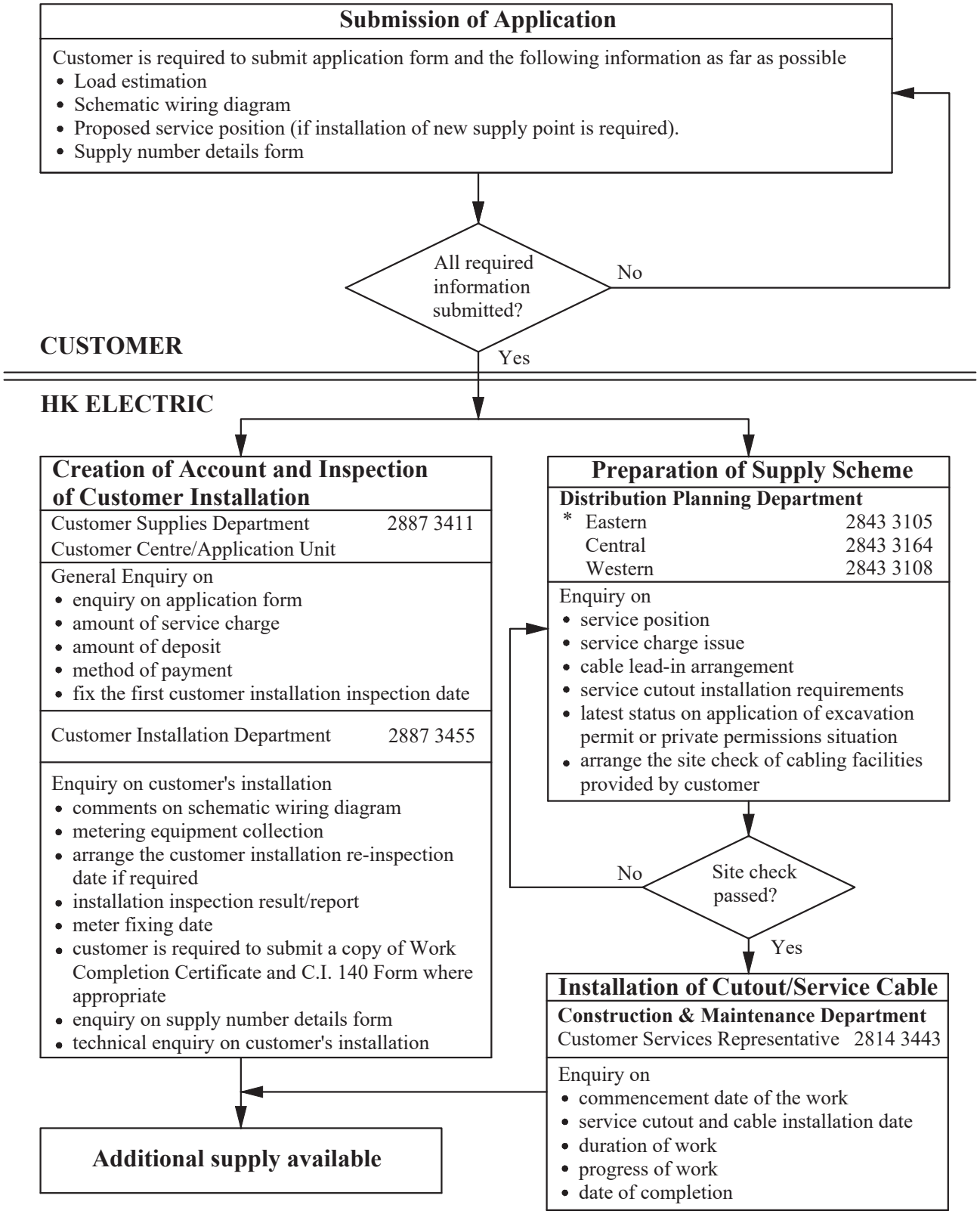

Remark : Please contact the corresponding department or call our Electricity-By-Phone Service at telephone No. 2887 3838 if you have any queries regarding the progress of application.

Drg. No. GCS/3/01

WORKFLOW AND TELEPHONE CONTACT LIST FOR APPLICATION OF ADDITIONAL LOAD

For application and enquiry for construction site temporary supply, please call
Smart Power for Construction Site hotline **2510 2701** or email to **SPCS@hkelectric.com**

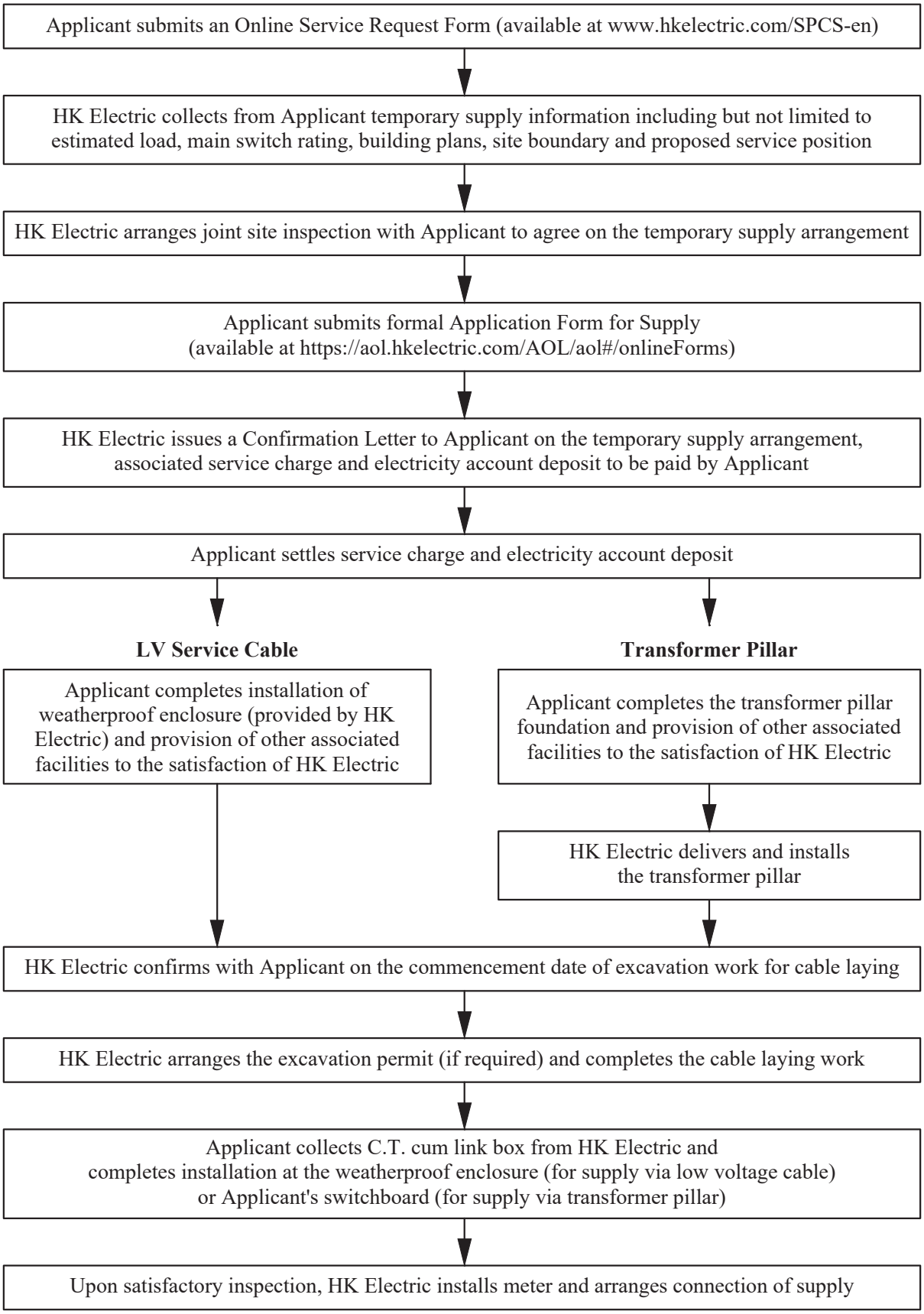

Drg. No. GCS/3/02

WORKFLOW OF APPLICATION FOR CONSTRUCTION SITE TEMPORARY SUPPLY

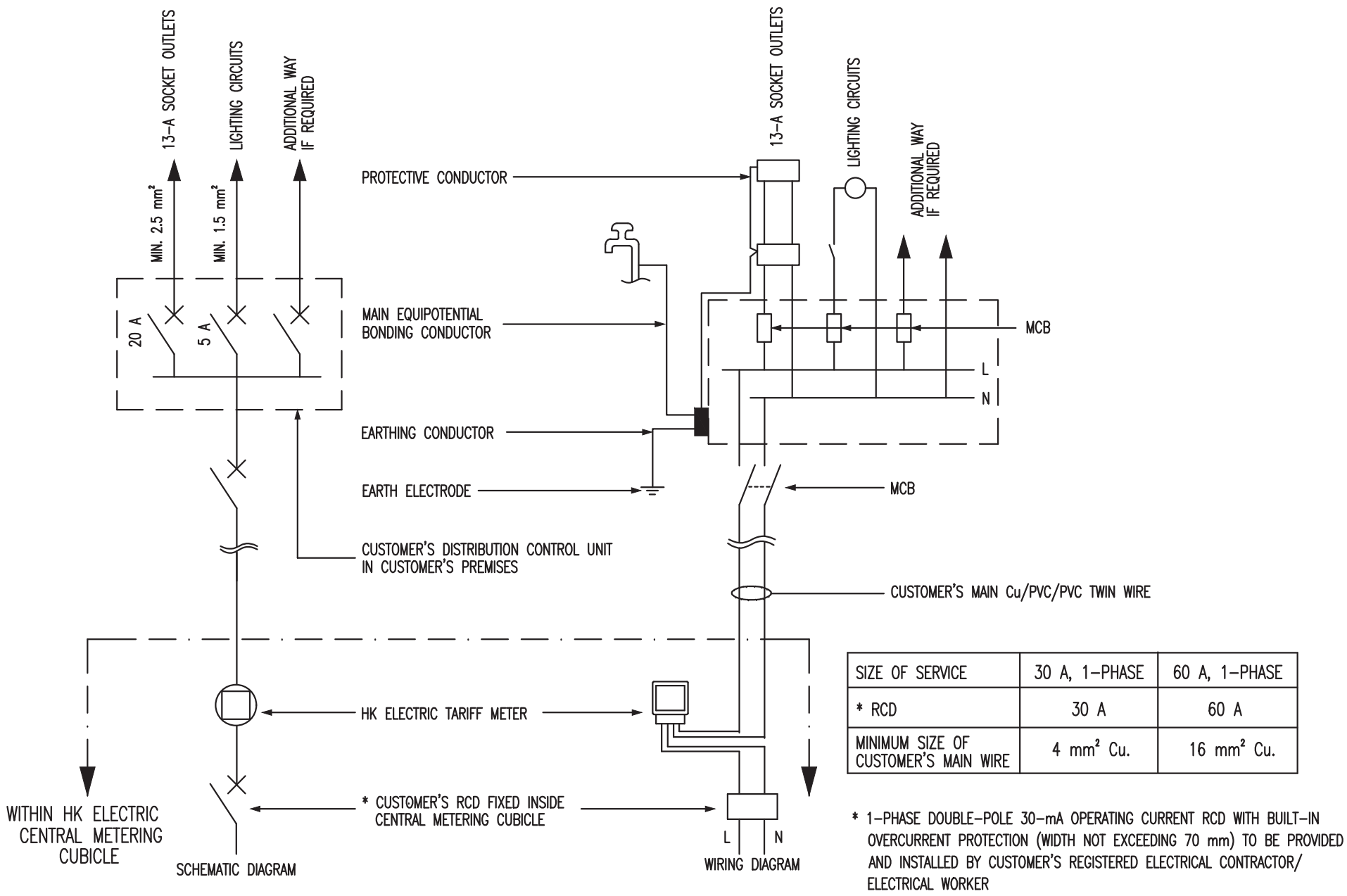

SIZE OF SERVICE	30 A, 1-PHASE	60 A, 1-PHASE
* RCD	30 A	60 A
MINIMUM SIZE OF CUSTOMER'S MAIN WIRE	4 mm² Cu.	16 mm² Cu.

* 1-PHASE DOUBLE-POLE 30-mA OPERATING CURRENT RCD WITH BUILT-IN OVERCURRENT PROTECTION (WIDTH NOT EXCEEDING 70 mm) TO BE PROVIDED AND INSTALLED BY CUSTOMER'S REGISTERED ELECTRICAL CONTRACTOR/ ELECTRICAL WORKER

Drg. No. GCS/3/03

SQUATTER HUT CENTRAL METERING SCHEME (P274/94/R-1)

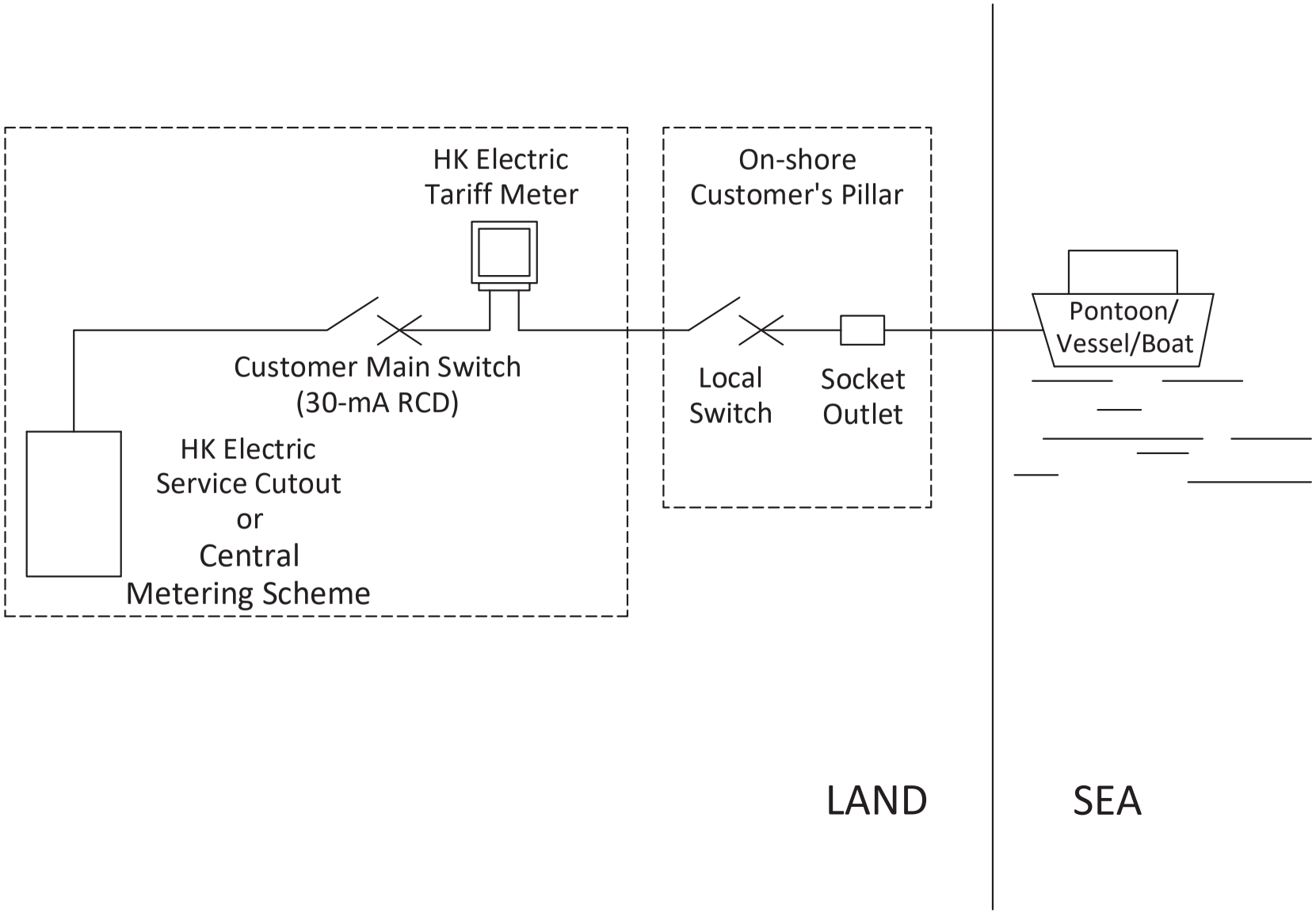

Drg. No. GCS/3/04

TYPICAL SUPPLY ARRANGEMENT FOR PONTOON/VESSEL/BOAT

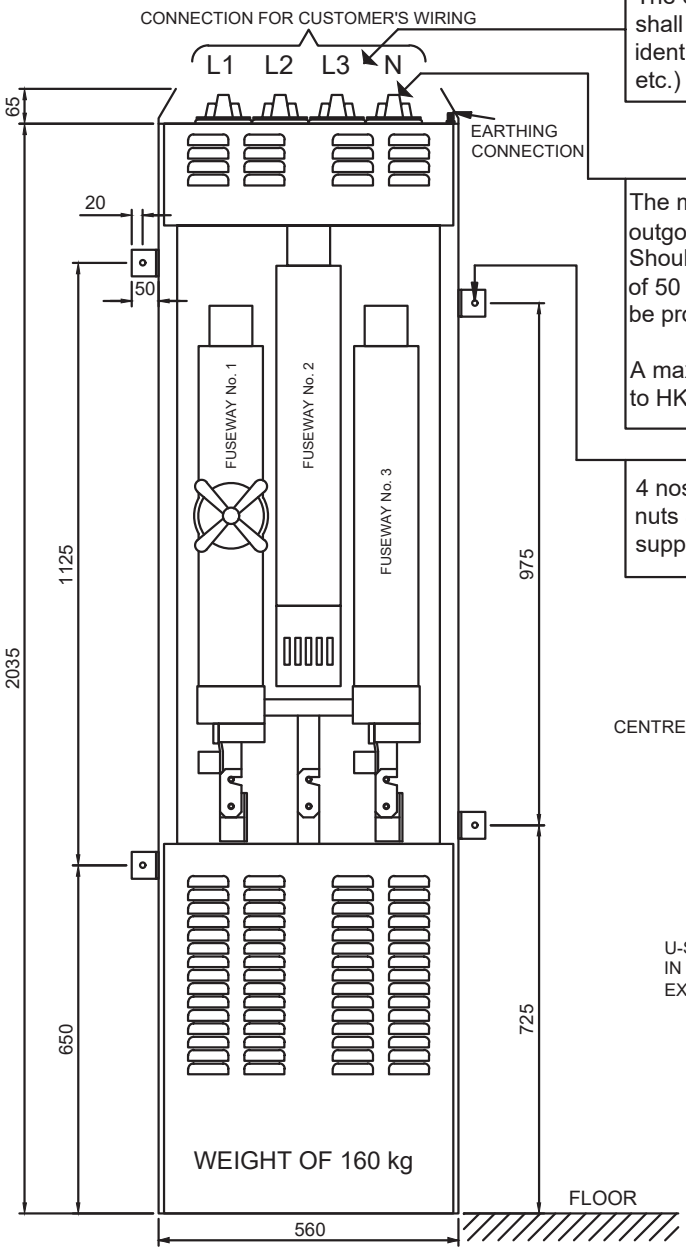

Front View of Service Cutout (LV RMU Type)

The cable ends terminated onto HK Electric service cutout shall be fitted with proper, durable and legible phase identification labels (such as cable ties, sleeves, ferrules etc.) marked in L1, L2, L3 and N.

The minimum size of copper conductor to be terminated onto the outgoing service terminals of HK Electric service cutout is 50 mm^2. Should the customer's main wiring be less than this size, a copper collar of 50 mm^2 (by hydraulic crimping or by mechanical connection) should be provided for termination onto HK Electric service cutout.

A maximum of two (2) sets of customer's wiring to be connected directly to HK Electric service cutout.

4 nos. mounting bracket (4 nos. M10 G.I. expansion anchor bolts with nuts & washers with protruded length of 50 mm from wall surface , to be supplied & installed by customer)

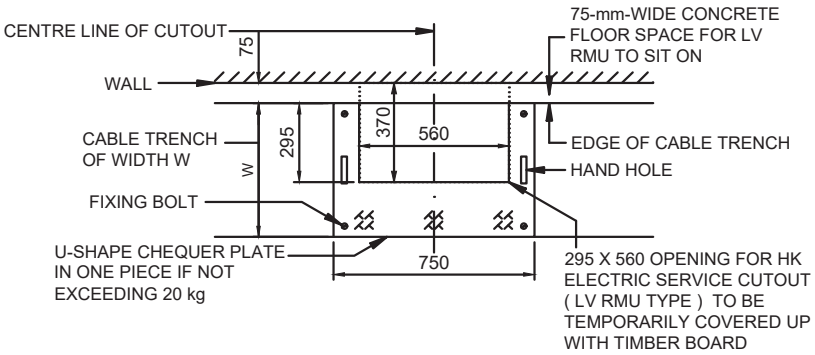

Typical Layout of Chequer Plates For HK Electric Service Cutout

NOTE : ALL DIMENSIONS ARE IN mm.

Drg. No. GCS/3/05

REQUIREMENTS FOR SERVICE CUTOUT (LV RMU TYPE) IN NEW BUILDING/PREMISES (P427/99/R-8) SHEET 1 OF 2

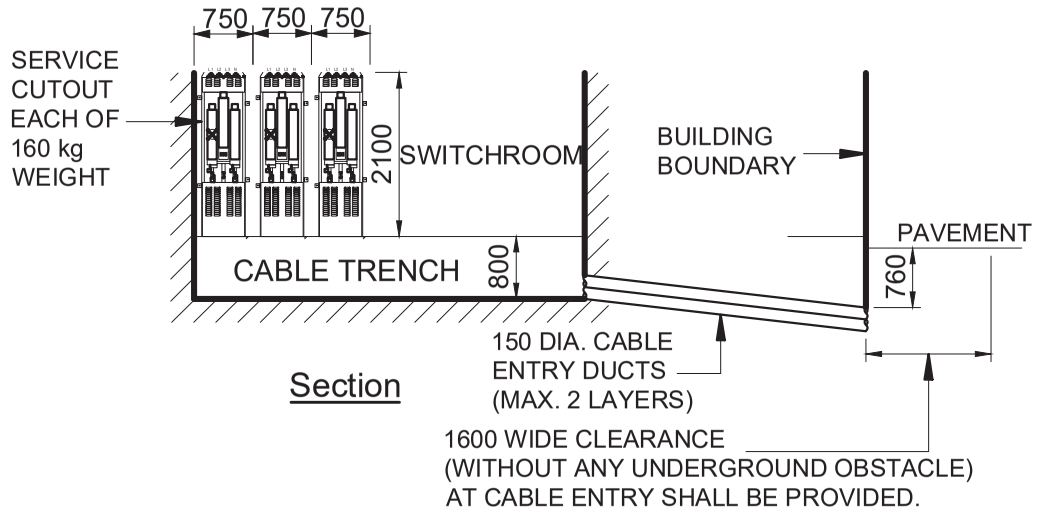

Section

Customer shall provide chequer plates to cover trench opening.

The chequer plates for each service cutout shall be of dimensions 750 mm X W, where W is the width of the cable trench. The chequer plates shall be in pieces forming area 750 mm X W in order that each piece shall not exceed 20 kg. The chequer plates shall be provided with hand holes, fixed by bolts and nuts and fitted with stiffeners if necessary.

The floor area measured 900 mm in front of each service cutout and measured 600 mm from both left hand side and right hand side (if not obstructed by the wall or door) of the centre line of each service cutout shall be of concrete floor or covered with chequer plates to facilitate the cutout installation work by HK Electric.

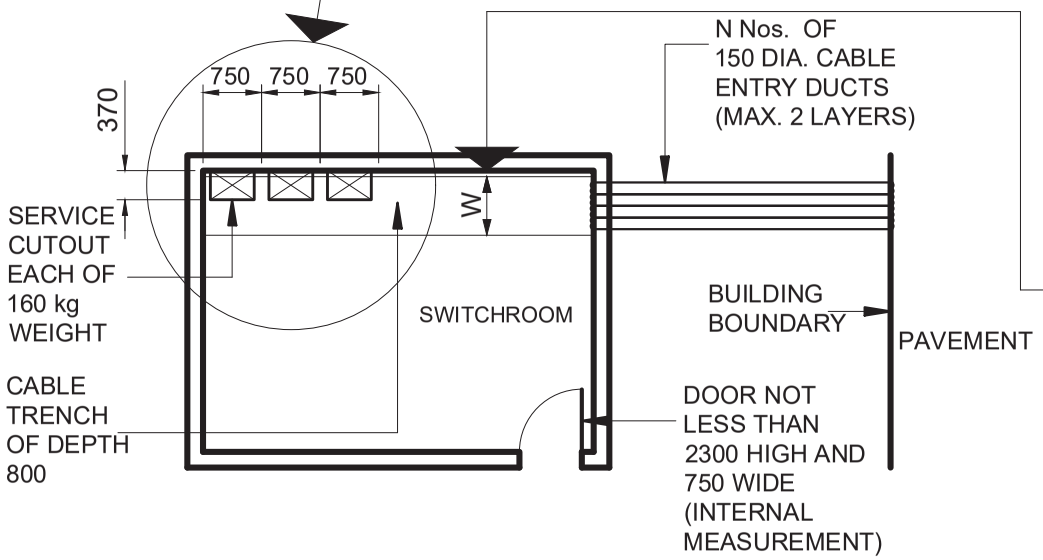

Part of Ground Floor Plan of a Typical Building

Floor space of 75 mm wide shall be provided between wall and edge of cable trench for LV RMU to sit on.

In case the width of this floor space exceeds 75 mm, customer shall construct a robust framework of hot dip galvanised steel to be mounted on wall so that the horizontal separation of framework and edge of trench will be 75 mm.

Holes of 14 mm dia. together with M10 bolts, nuts and washers shall be provided on the framework to suit the 4 nos. mounting bracket at the service cutout.

NOTE : ALL DIMENSIONS ARE IN mm.

Drg. No. GCS/3/05

REQUIREMENTS FOR SERVICE CUTOUT (LV RMU TYPE) IN NEW BUILDING/PREMISES (P427/99/R-8) SHEET 2 OF 2

Notes for Drawing No. GCS/3/05

1. This drawing shows the typical layout of cable entry facilities in buildings where there is no underground obstacles. All dimensions shown in this drawing are in mm (millimetre).

2. Reinstatement of excavation surfaces required for provision of cable entry facilities and cable laying work by **The Hongkong Electric Co. Ltd.** 香港電燈有限公司 within the building lot boundary shall be the responsibility of customers.

3. The cable entry facilities shall be sealed properly by customers against ingress of water to the switchroom and other parts of the building during the excavation work by customers and after HK Electric new cables are installed.

4. All excavation work by customers shall be carried out within the building lot boundary. It is unlawful to excavate in public road and footway outside the building lot boundary without prior approval of the Government Highways Department.

5. A minimum clearance space of 900 mm for the full width and in front of HK Electric service cutouts and customer's switchgear shall be provided.

6. Where there is spare space on wall of switchroom for contingency service cutout (please refer to the returned marked-up copy of Ground Floor Plan), the spare space shall be painted in red with an engraved label not less than 150 mm wide x 75 mm high stating

   "SPACE RESERVED FOR HK ELECTRIC CONTINGENCY SERVICE CUTOUT" with Chinese translation,「應急熔斷器之預留空間」being securely fixed on the wall space.

7. Normally, HK Electric will install service cutouts at the positions furthest from the cable entry ducts. Spare spaces for contingency service cutouts will be the closest from the cable entry ducts.

8. The number of cable entry ducts and width of cable trench shall be provided according to the following table, unless otherwise specified.

No. of Service Cutout Spaces (including spare, if any)	No. of Cable Entry Ducts (N)	Width of Cable Trench (W)
1	4	500 mm
2	6	600 mm
3	8	750 mm

Notes for Drawing No. GCS/3/05

9. A minimum clearance of 1600 mm wide (without any underground obstacle) immediately in front of the cable entries should be provided for cable installation. Where necessary the architect shall be responsible for clearing underground obstacles with other utility companies before hand-over of the switchroom to HK Electric for cable installation.

10. The door of switchroom shall not be less than 750 mm wide by 2300 mm high measured clear of obstacles.

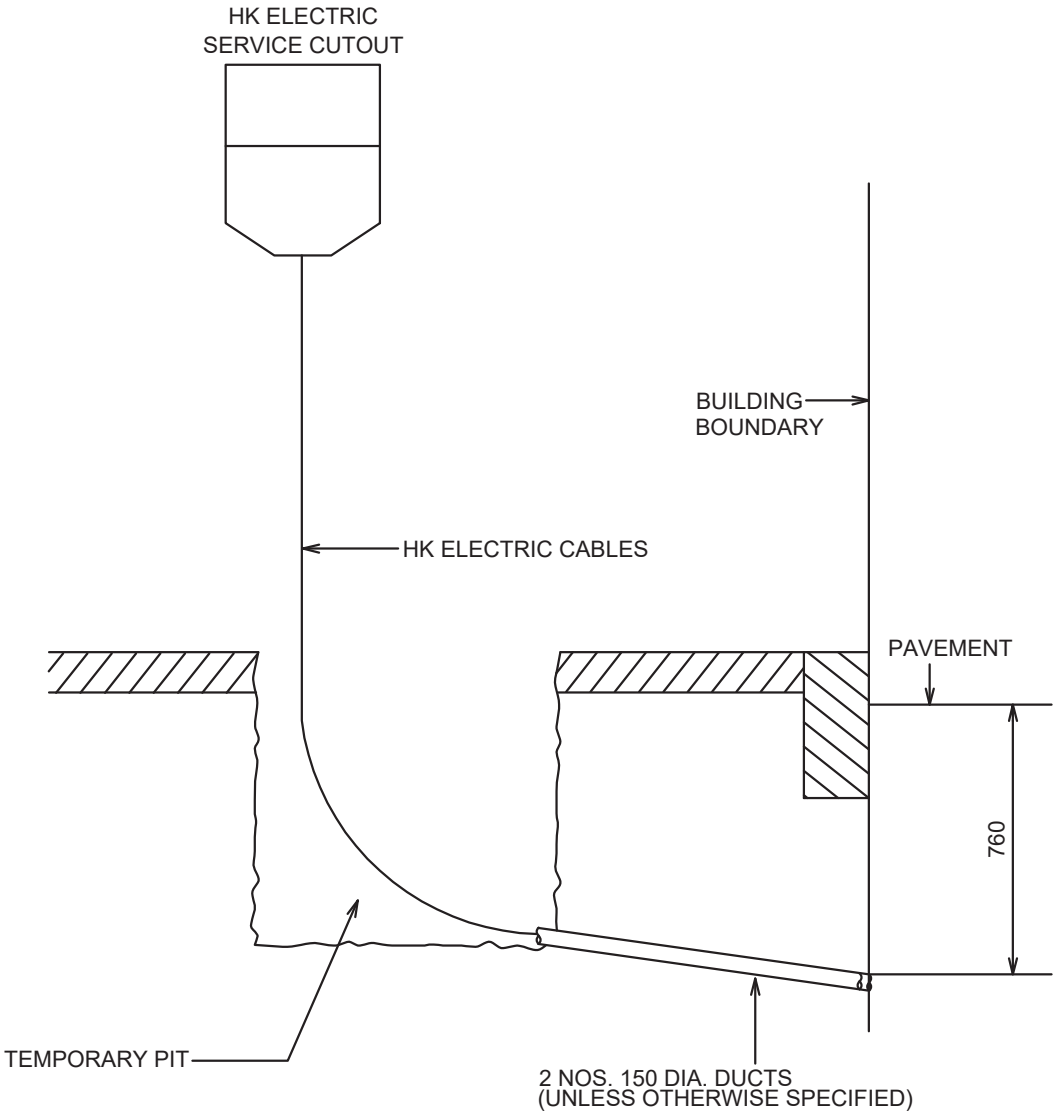

GENERAL NOTES:

1. This drawing shows the typical layout of cable entry facilities in buildings where there is no underground obstacles. All dimensions shown in this drawing are in mm (millimetre).

2. Unless otherwise specified, 2 nos. of 150-mm-diameter ducts shall be provided for cable entry.

3. Reinstatment of excavation surfaces required for provision of cable entry facilities and cable laying work by The Hongkong Electric Co. Ltd. within the building lot boundary shall be the responsibility of customers.

4. The temporary pit shall be backfilled by customers. All pits and trenches within the building lot boundary shall be filled up temporarily with sand bags and be covered in proper condition in order to avoid hazards endangering residents in the building.

5. The cable entry facilities shall be sealed properly by customers against ingress of water to other parts of the premises during the excavation work by customers and after HK Electric new cables are installed.

6. All excavation work by customers shall be carried out within the building lot boundary. It is unlawful to excavate in public road and footway outside the building lot boundary without prior approval of the Government Highways Department.

Drg. No. GCS/3/06

DETAILS OF CABLE ENTRY FACILITIES IN EXISTING BUILDING FOR CUTOUT INSTALLATION (P53/89/R-2)

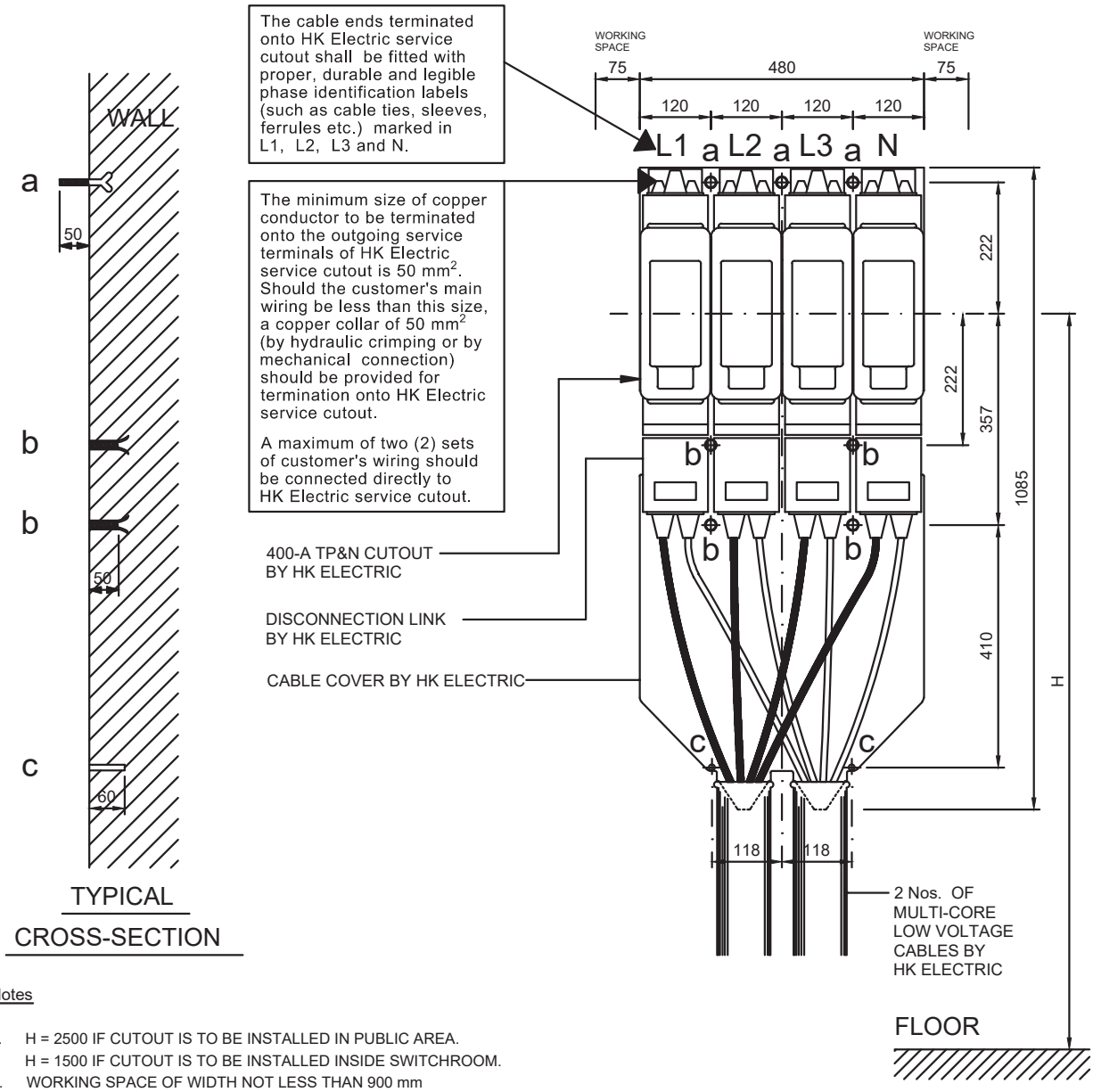

Notes

1. H = 2500 IF CUTOUT IS TO BE INSTALLED IN PUBLIC AREA.
   H = 1500 IF CUTOUT IS TO BE INSTALLED INSIDE SWITCHROOM.
2. WORKING SPACE OF WIDTH NOT LESS THAN 900 mm SHALL BE PROVIDED IN FRONT OF THE CUTOUT.
3. PROTRUSION OF CUTOUT IS 320 mm.
4. EXTERNAL SURFACE OF CUTOUT IS MADE OF INSULATED MATERIAL.
5. CUSTOMER IS REQUIRED TO PASTE THE SCALE 1 : 1 TEMPLATE No. EQE-16306-L ON THE WALL TO FACILITATE THEIR DRILLING WORK ON WALL AND THE INSPECTION BY HK ELECTRIC.
6. NO ENCLOSURE IS ALLOWED TO BE INSTALLED TO COVER UP THE CUTOUT AND LV CABLES UNLESS IT IS REQUIRED TO MEET FSD'S REQUIREMENTS. IF INSTALLATION OF THE ENCLOSURE IS REQUIRED, THE ENCLOSURE SHALL HAVE REMOVABLE DESIGN AND IT SHALL BE THE RESPONSIBILITY OF CUSTOMER TO REMOVE THE ENCLOSURE AND PROVIDE A MINIMUM WORKING SPACE OF 900 mm IN FRONT OF THE CUTOUT FOR HK ELECTRIC OPERATIONAL NEEDS AND MAINTENANCE.
7. ALL DIMENSIONS ARE IN mm.

ITEM	DESCRIPTON
a	3 Nos. M10 G.I. EXPANSION ANCHOR BOLTS WITH NUTS & WASHERS WITH PROTRUDED LENGTH OF 50 mm FROM WALL SURFACE , TO BE SUPPLIED AND INSTALLED BY CUSTOMER.
b	4 Nos. M10 G.I. EXPANSION ANCHOR WITH 50 mm BOLTS & WASHERS TO BE FLUSH WITH WALL SURFACE , TO BE SUPPLIED AND INSTALLED BY CUSTOMER.
c	2 Nos. OF Ø10 mm HOLES (60 mm DEEP) TO BE DRILLED ON WALL BY CUSTOMER.

Drg. No. GCS/3/07

SPACE REQUIREMENTS FOR 400-A SERVICE CUTOUT IN EXISTING BUILDING AND LOCATIONS WITHOUT SWITCHROOM (SWITCH TYPE AND WITH DISCONNECTION LINK) (P213/92/R-5)

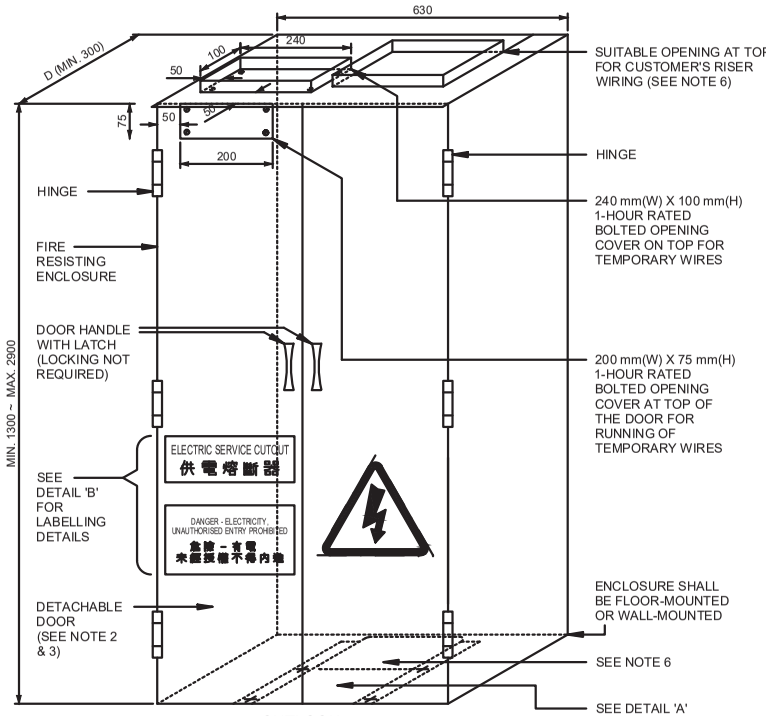

OUTLOOK

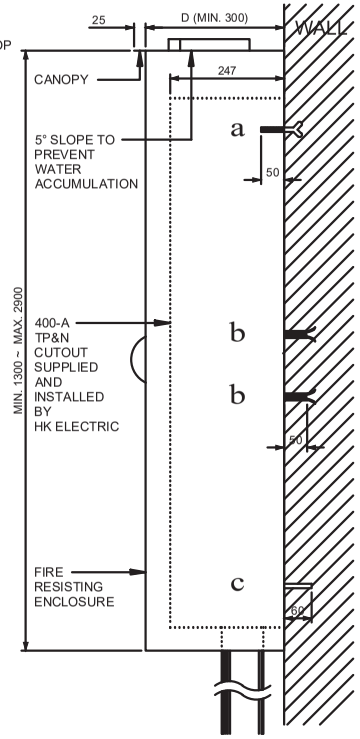

TYPICAL CROSS-SECTION

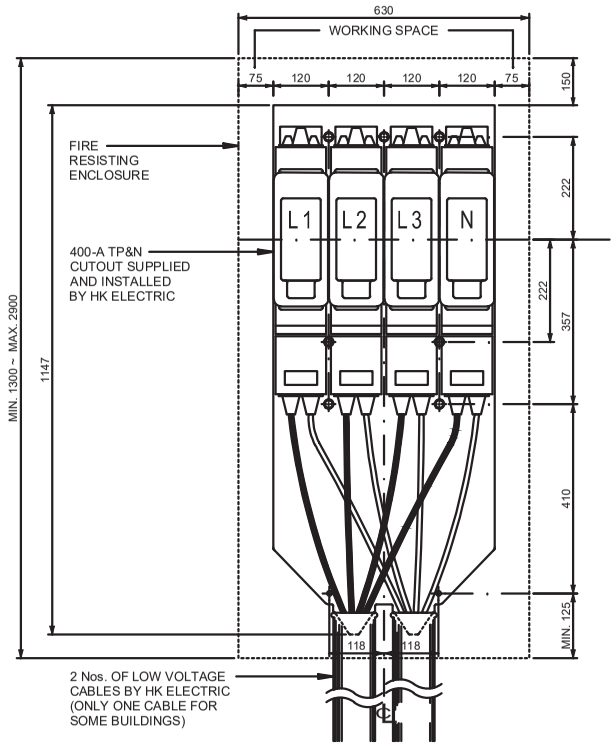

FRONT VIEW

NOTES :

1. WORKING SPACE OF WIDTH NOT LESS THAN 900 mm SHALL BE PROVIDED IN FRONT OF HK ELECTRIC SERVICE CUTOUT.
2. THE DOOR SHALL BE WITH FULL SWING 180 DEGREE. THE DOOR SHALL BE DETACHABLE AND CAN ONLY BE DETACHED BY PUSHING UPWARDS WITHOUT ANY TOOL WHEN IT HAS BEEN OPENED FOR MORE THAN 30 DEGREE.
3. THE TOTAL WEIGHT OF EACH REMOVABLE DOOR SHALL NOT EXCEED 10 kgf.
4. THE ENCLOSURE SHALL NOT HINDER OR OBSTRUCT OPERATION AND MAINTENANCE OF HK ELECTRIC SERVICE CUTOUT.
5. THE FIRE RESISTING ENCLOSURE SHALL BE CONSTRUCTED TO HAVE A FIRE RESISTANCE PERIOD OF NOT LESS THAN 1 HOUR WITH REGARD TO BOTH INTEGRITY AND INSULATION, COMPLYING WITH FSD REQUIREMENTS AND RELEVANT GOVERNMENT REGULATIONS.
6. THE OPENINGS FOR CUSTOMER RISER WIRE ENTRY FROM TOP AND HK ELECTRIC CABLE ENTRY FROM BOTTOM OF THE FIRE RESISTING ENCLOSURE SHALL BE PROPERLY SEALED WITH FIRE RETARDANT MATERIALS BY CUSTOMER AFTER CABLE INSTALLED.
7. THE WHOLE BASE PLATE SHOULD BE COMPLETELY REMOVABLE FOR EASY CABLE LAYING AND CABLE TERMINATION.
8. THE OWNER OF THE ENCLOSURE SHALL SUBMIT A CONFIRMATION LETTER TO HK ELECTRIC UNDERTAKING THE FUTURE MAINTENANCE OF THE ENCLOSURE.
9. DEPTH OF HK ELECTRIC SERVICE CUTOUT IS 247 mm. THE MINIMUM DEPTH OF THE ENCLOSURE SHALL BE 300 mm.
10. FIRE RATED MATERIAL WITH TRANSPARENT GLASS AND ACCESS PANEL SHALL BE 1-HOUR FIRE RATED WITH REGARD TO BOTH INTEGRITY AND INSULATION.
11. EXTERNAL SURFACE OF HK ELECTRIC SERVICE CUTOUT IS MADE OF FLAME RETARDANT INSULATED MATERIAL TO USA STANDARD UL94-V0.
12. EXCEPT IN COMPLIANCE WITH TABLES A TO F OF THE CODE OF PRACTICE FOR FIRE RESISTING CONSTRUCTION 1996, TEST CERTIFICATES AND REPORTS SHOULD BE SUBMITTED TO THE BUILDINGS DEPARTMENT TO DEMONSTRATE THAT THE ENCLOSURE, ACCESS PANEL, MATERIAL OR CONSTRUCTION ARE CAPABLE OF RESISTING THE ACTION OF FIRE FOR THE SPECIFIED PERIOD UPON COMPLETION. OTHER RELEVANT REQUIREMENTS OF THE BUILDINGS ORDINANCE AND THE FIRE SAFETY (BUILDINGS) ORDINANCE CAP.572 SHOULD ALSO BE COMPLIED WITH.
13. THE CUSTOMER IS RESPONSIBLE TO REMOVE THE ENCLOSURE TO FACILITATE HK ELECTRIC OPERATIONAL NEEDS AND MAINTENANCE WHEN SO REQUIRED BY HK ELECTRIC.
14. ALL DIMENSIONS ARE IN mm.

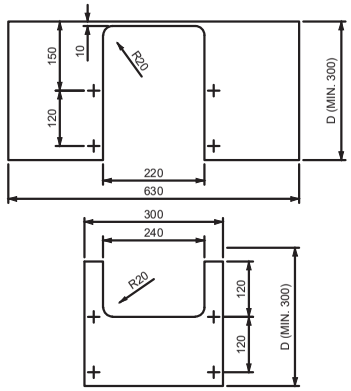

DETAIL 'A' - CABLE ENTRY BOTTOM PLATE

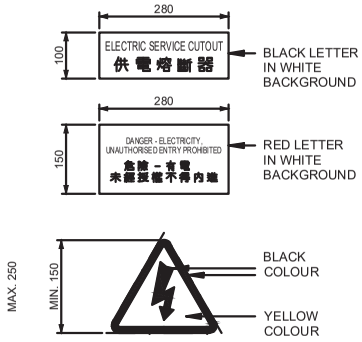

DETAIL 'B' - LABELLING REQUIREMENTS

Drg. No. GCS/3/08

TYPICAL DETAILS OF FIRE RESISTING ENCLOSURE FOR HK ELECTRIC SERVICE CUTOUT UNDER THE FIRE SAFETY (COMMERCIAL PREMISES) ORDINANCE OR FIRE SAFETY (BUILDINGS) ORDINANCE (P707/11/R-1)

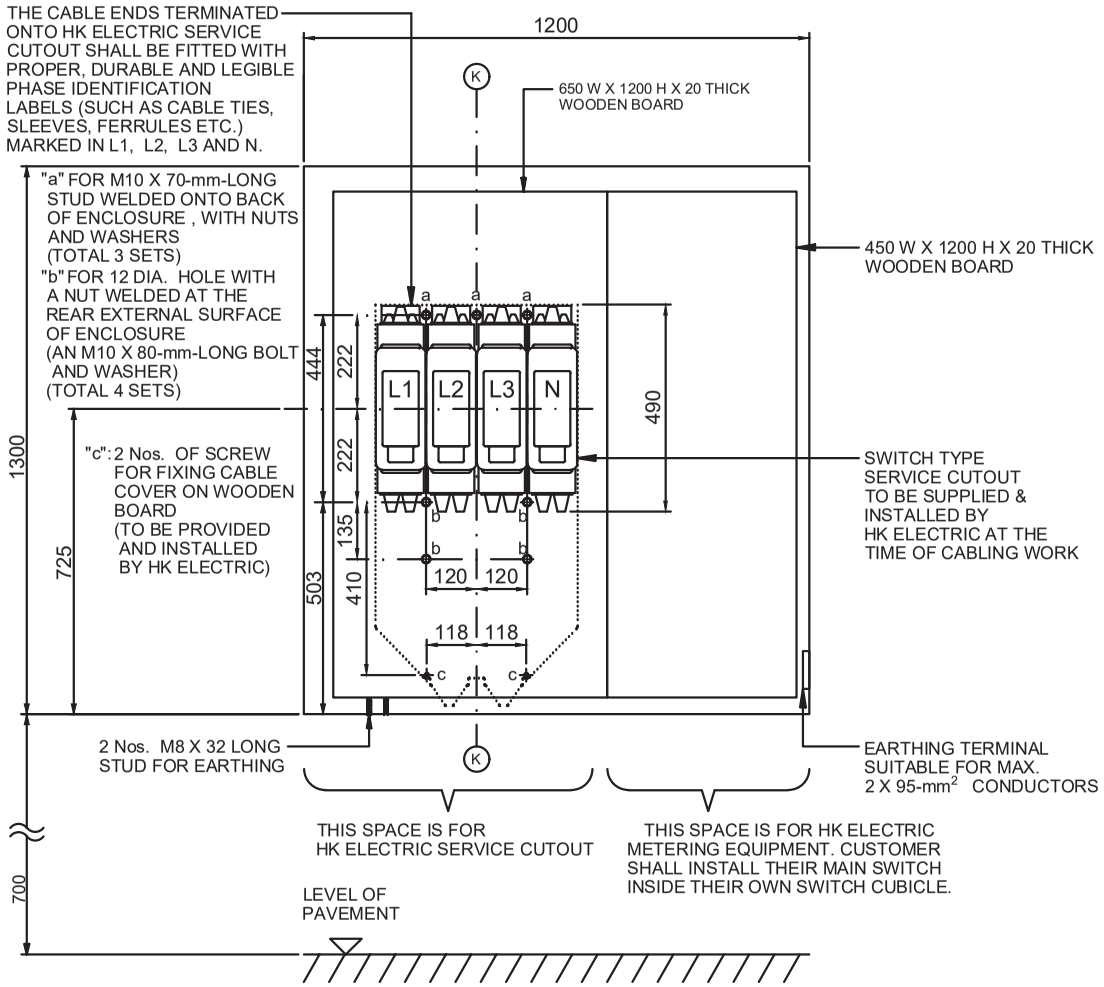

INTERNAL LAYOUT OF WEATHERPROOF ENCLOSURE

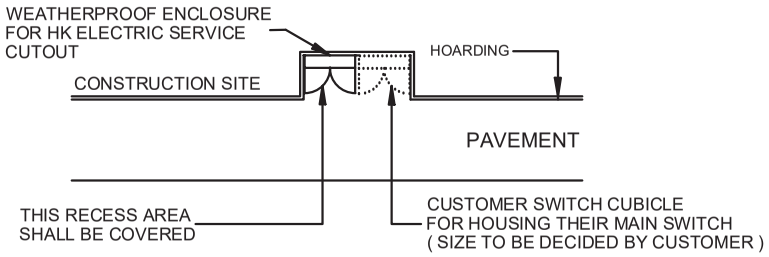

LOCATION PLAN

NOTE : ALL DIMENSIONS ARE IN mm.

Drg. No. GCS/3/09

INSTALLATION OF MILD STEEL WEATHERPROOF ENCLOSURE FOR SITE SERVICES (UP TO 400 A) (P661/08) SHEET 1 OF 3

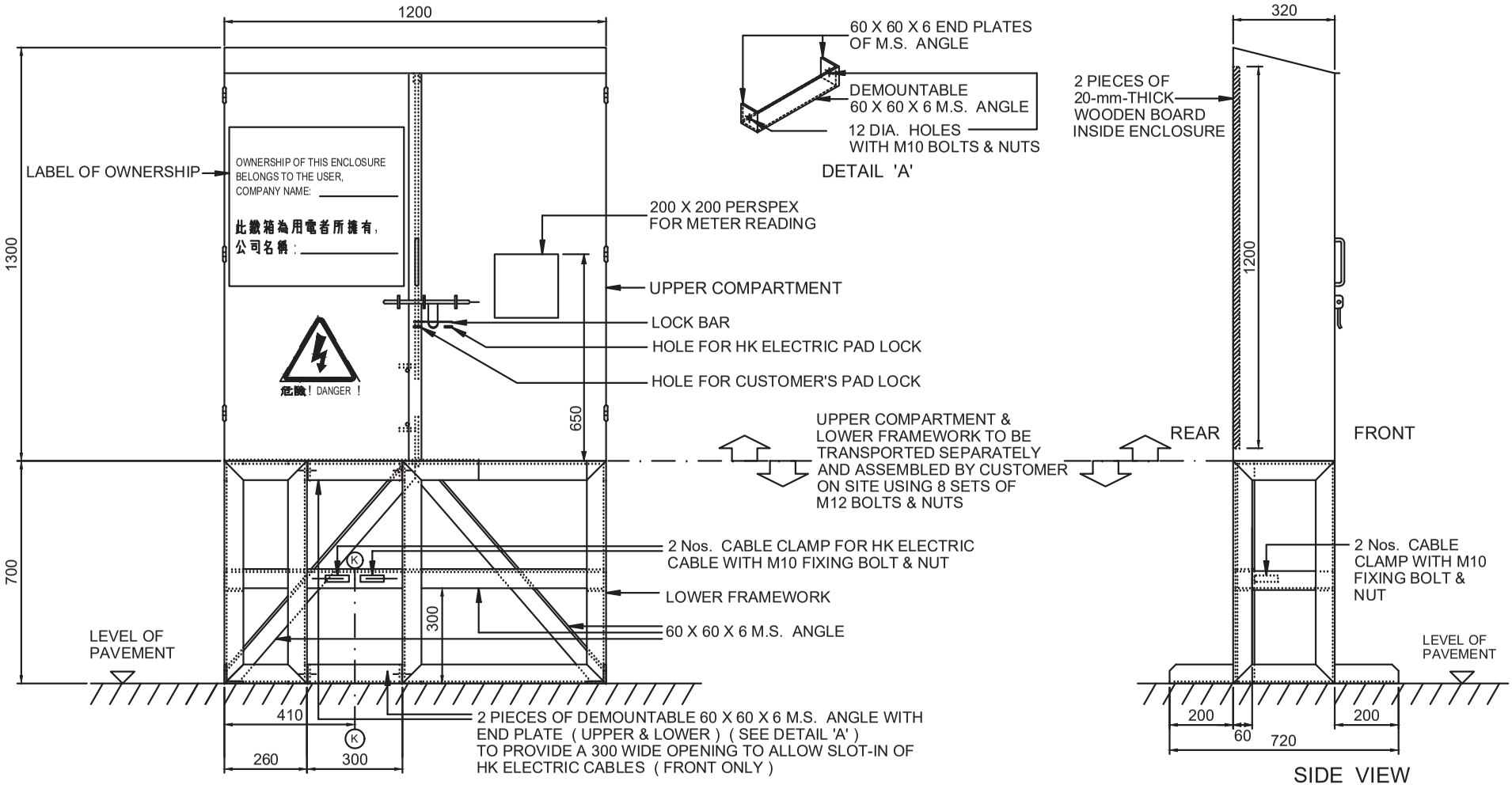

GENERAL CONSTRUCTION

NOTE : ALL DIMENSIONS ARE IN mm.

3.25

Drg. No. GCS/3/09

INSTALLATION OF MILD STEEL WEATHERPROOF ENCLOSURE FOR SITE SERVICES (UP TO 400 A) (P661/08) SHEET 2 OF 3

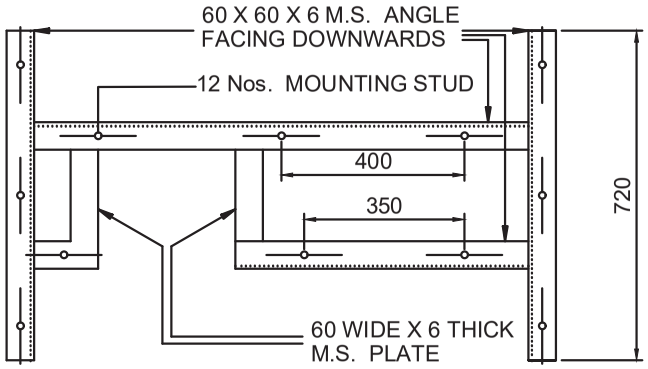

MOUNTING TEMPLATE (SUPPLIED BY HK ELECTRIC AND TO BE CAST IN CONCRETE PLINTH BY CUSTOMER)

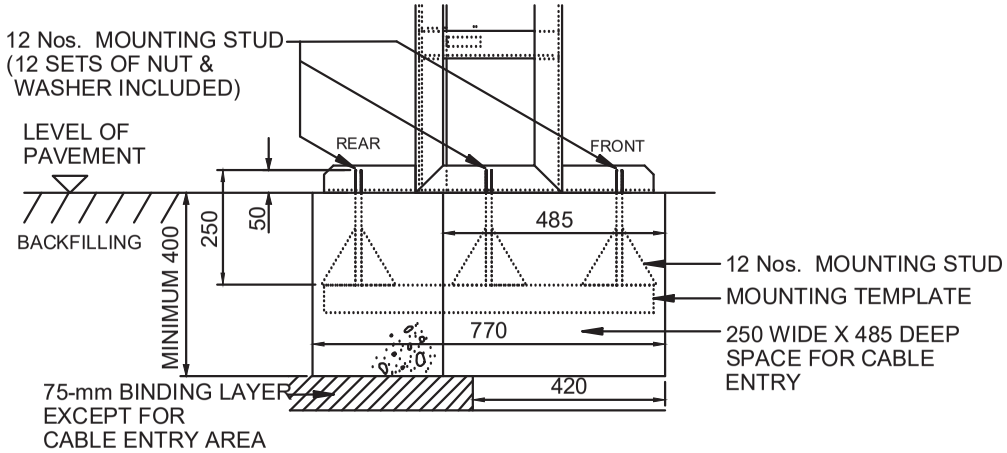

SECTION 'X' - 'X'

MOUNTING TEMPLATE INSTALLATION

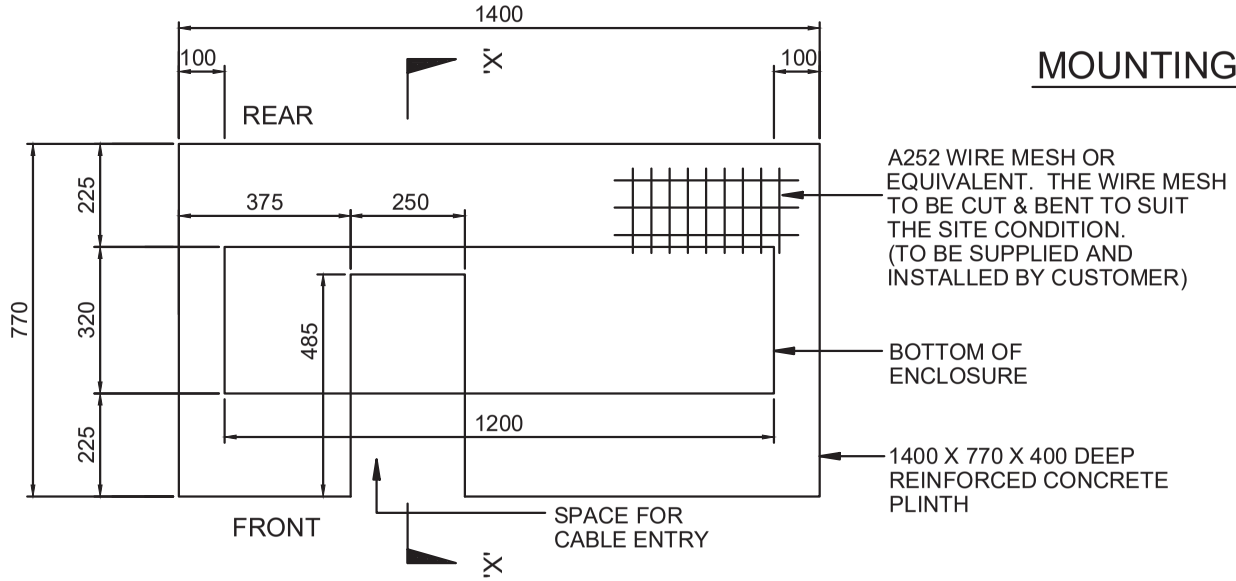

CONCRETE PLINTH (BY CUSTOMER)

NOTE : ALL DIMENSIONS ARE IN mm.

Drg. No. GCS/3/09

INSTALLATION OF MILD STEEL WEATHERPROOF ENCLOSURE FOR SITE SERVICES (UP TO 400 A) (P661/08) SHEET 3 OF 3

Notes for Drawing No. GCS/3/09

1. A weatherproof enclosure comprising upper compartment, lower framework and mounting template provided by HK Electric shall be installed by customer on site.

2. The ownership of the weatherproof enclosure belongs to the customer after collection of the enclosure. Customer is required to write down the company name on enclosure at the space provided on the "LABEL OF OWNERSHIP".

3. Customer shall provide and install a switch cubicle adjacent to the weatherproof enclosure for housing customer main switch and associated installation.

4. The weatherproof enclosure and switch cubicle shall be installed inside the boundary of construction site and be facing the pavement as shown on the location plan. A minimum clearance space of 900 mm for the full width in front of enclosure shall be provided. A clear access to the enclosure shall be provided without any obstruction from covered walkway.

5. The mounting template shall be cast in a reinforced concrete plinth by customer.

6. The concrete shall be designed mix of grade 20/20D with compressive stress 20 N/mm^2 at 28 days.

7. The concrete cover to mesh reinforcement shall be 50 mm minimum.

8. Proper earthing of the weatherproof enclosure shall be by customer.

9. Customer is required to inform HK Electric for an inspection after completion of the weatherproof enclosure installation and their pad lock fitted.

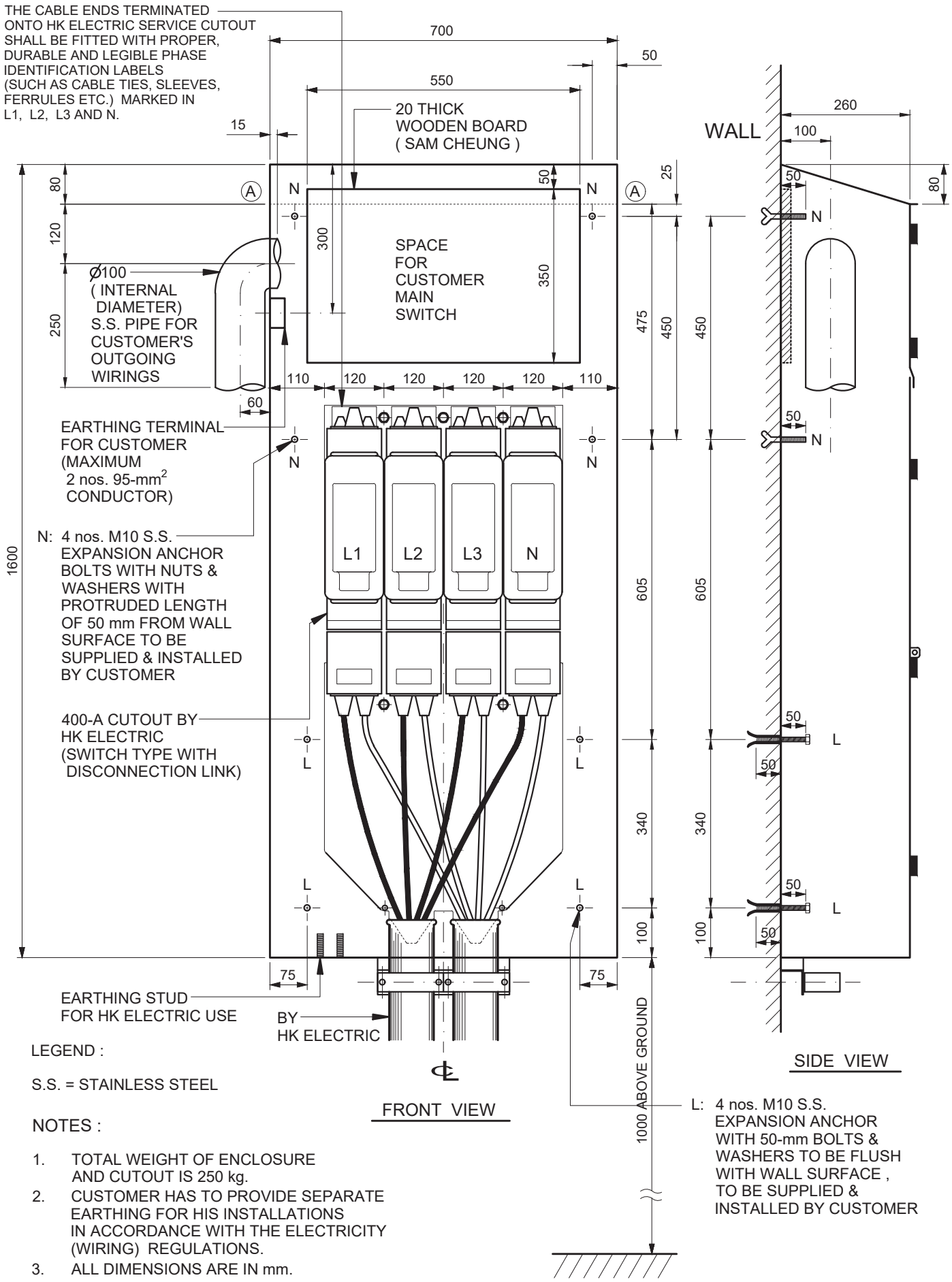

LEGEND :

S.S. = STAINLESS STEEL

NOTES :

1. TOTAL WEIGHT OF ENCLOSURE AND CUTOUT IS 250 kg.
2. CUSTOMER HAS TO PROVIDE SEPARATE EARTHING FOR HIS INSTALLATIONS IN ACCORDANCE WITH THE ELECTRICITY (WIRING) REGULATIONS.
3. ALL DIMENSIONS ARE IN mm.

Drg. No. GCS/3/10

SPACE REQUIREMENTS FOR STAINLESS STEEL WEATHER-PROOF ENCLOSURE FOR VILLAGE HOUSE ON LAMMA ISLAND (P72/89/R-8)

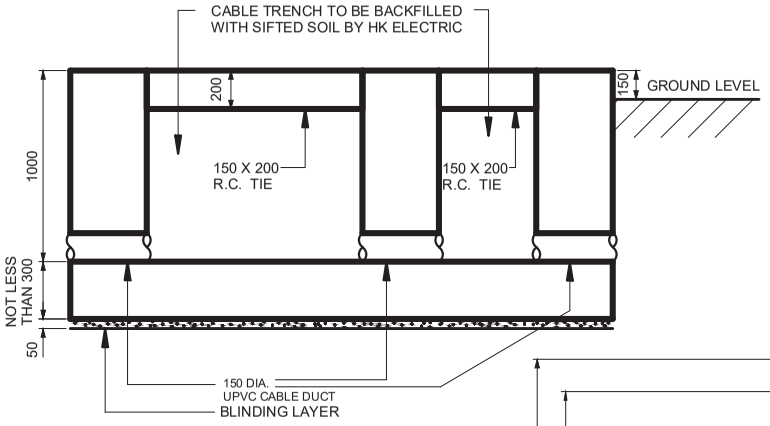

SECTION 'X' - 'X'

NOTES :

1. THE TRANSFORMER PILLAR FOUNDATION SHALL BE DESIGNED AND CONSTRUCTED BY CUSTOMER TO WITHSTAND THE TOTAL WEIGHT OF THE PILLAR AND EQUIPMENT INSIDE THE PILLAR WHICH SHOULD BE TAKEN AS 10000 kg (10 TONNES).
2. THE ACCESS TO THE TRANSFORMER PILLAR SHALL BE FREELY AVAILABLE AT ALL TIMES AND AT LEAST ONE SIDE OF THE PILLAR SHALL BE AT THE PERIPHERY OF THE CONSTRUCTION SITE.
3. THE ACCESS TO CUSTOMER'S MAIN SWITCHROOM SHALL BE FREELY AVAILABLE AT ALL TIMES AND SHALL BE AT THE PERIPHERY OF THE CONSTRUCTION SITE.
4. THE SPACE FOR TRANSFORMER PILLAR SHALL BE ON LEVELLED AND STABLE GROUND FREE FROM FLOODING AND LANDSLIDE HAZARD WITH MINIMUM 1600 mm ALL ROUND CLEARANCE.
5. ALL DIMENSIONS ARE IN mm.

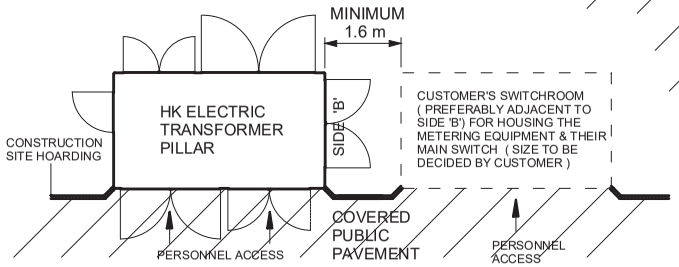

LOCATION PLAN

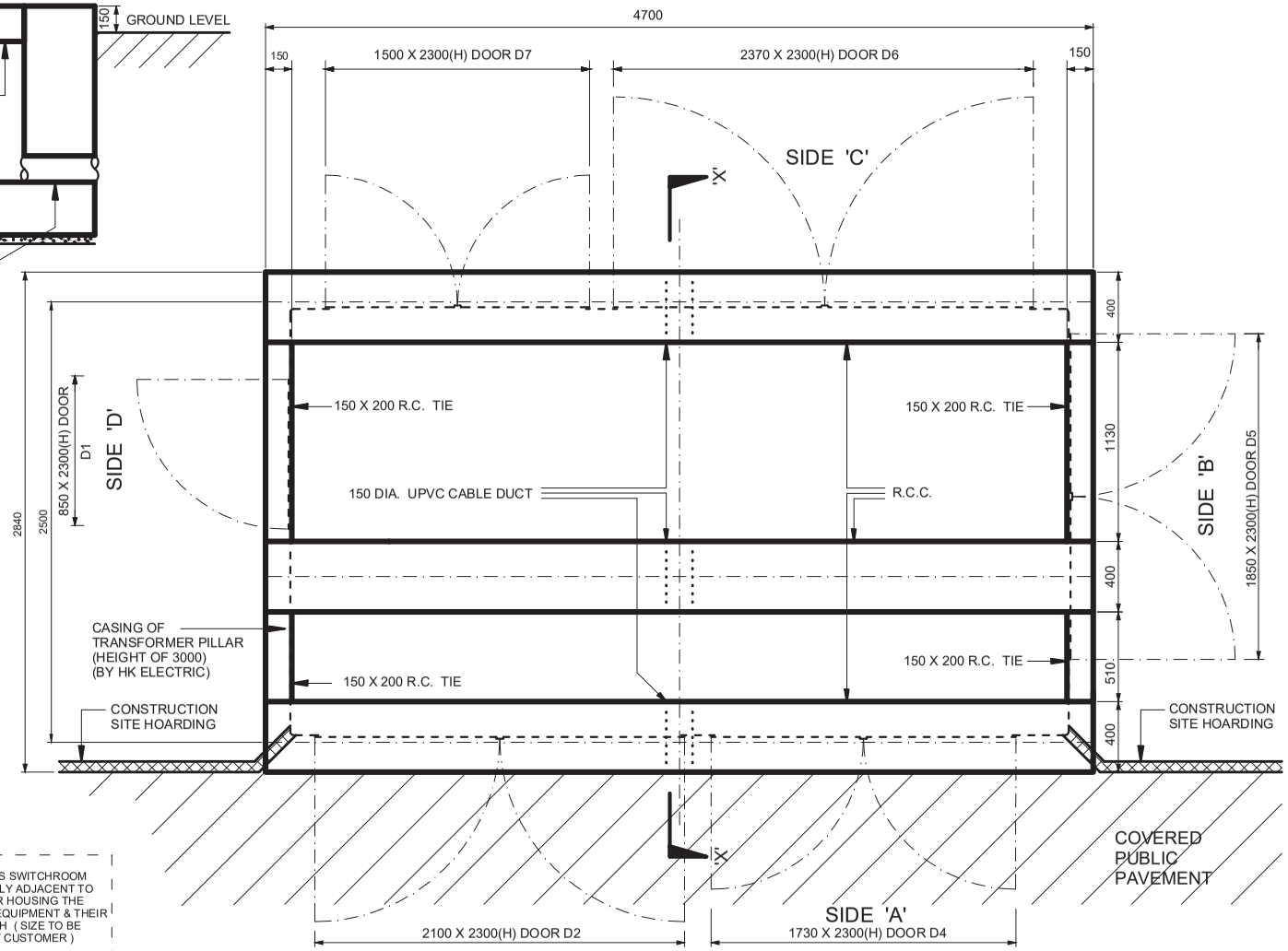

PLAN

Drg. No. GCS/3/11

TRANSFORMER PILLAR FOUNDATION

(FOR T.P. IN CONSTRUCTION SITE WITH RTU) (P505/00/R-2)

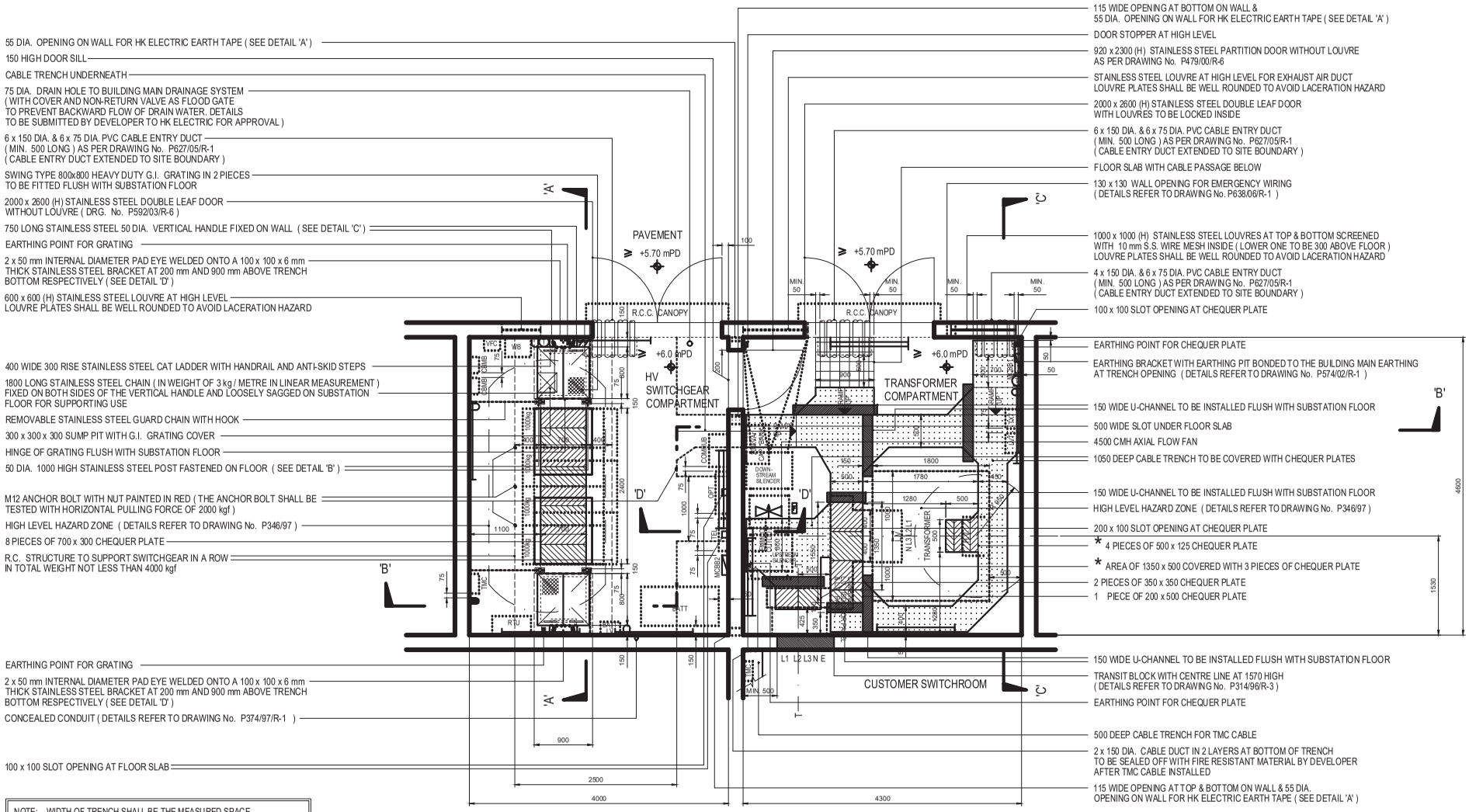

NOTE: WIDTH OF TRENCH SHALL BE THE MEASURED SPACE BETWEEN EDGES OF CHEQUER PLATE AND SUPPORTING ANGLES

OPTION 1

PLAN OF TRANSFORMER COMPARTMENT & HV SWITCHGEAR COMPARTMENT

(FOR LEVEL DIFFERENCE BETWEEN SUBSTATION FLOOR AND OUTSIDE PAVEMENT LEVEL ≤ 300 mm AND NOT LESS THAN 150 mm)

Drg. No. GCS/3/12

TYPICAL LAYOUT FOR 1 - TX. SUBSTATION WITH HV CABLE PIT (P512/00/R-9) SHEET 1 OF 9

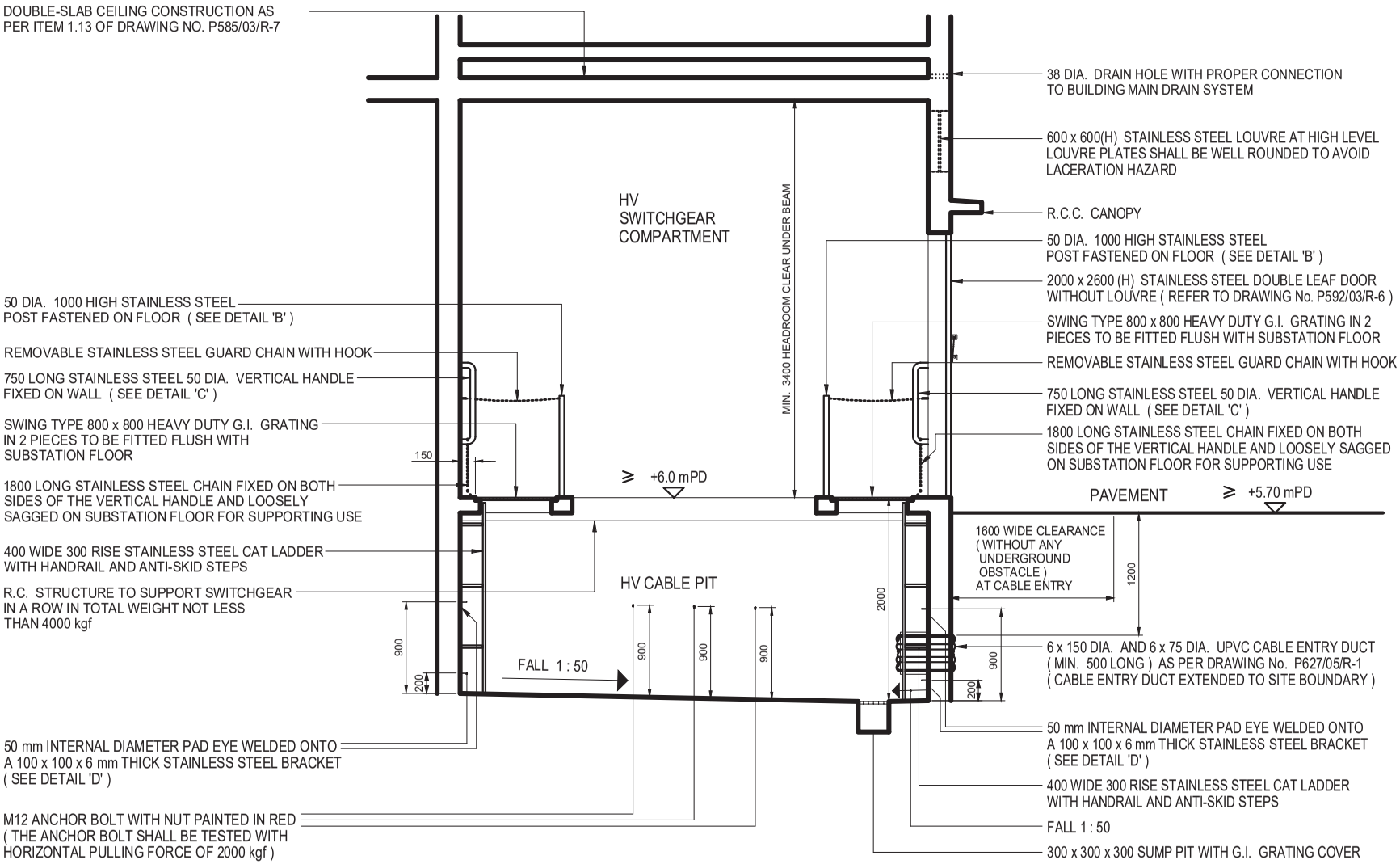

SECTION 'A' - 'A'

NOTE : ALL DIMENSIONS ARE IN mm.

Drg. No. GCS/3/12

TYPICAL LAYOUT FOR 1 - TX. SUBSTATION WITH HV CABLE PIT (P512/00/R-9) SHEET 2 OF 9

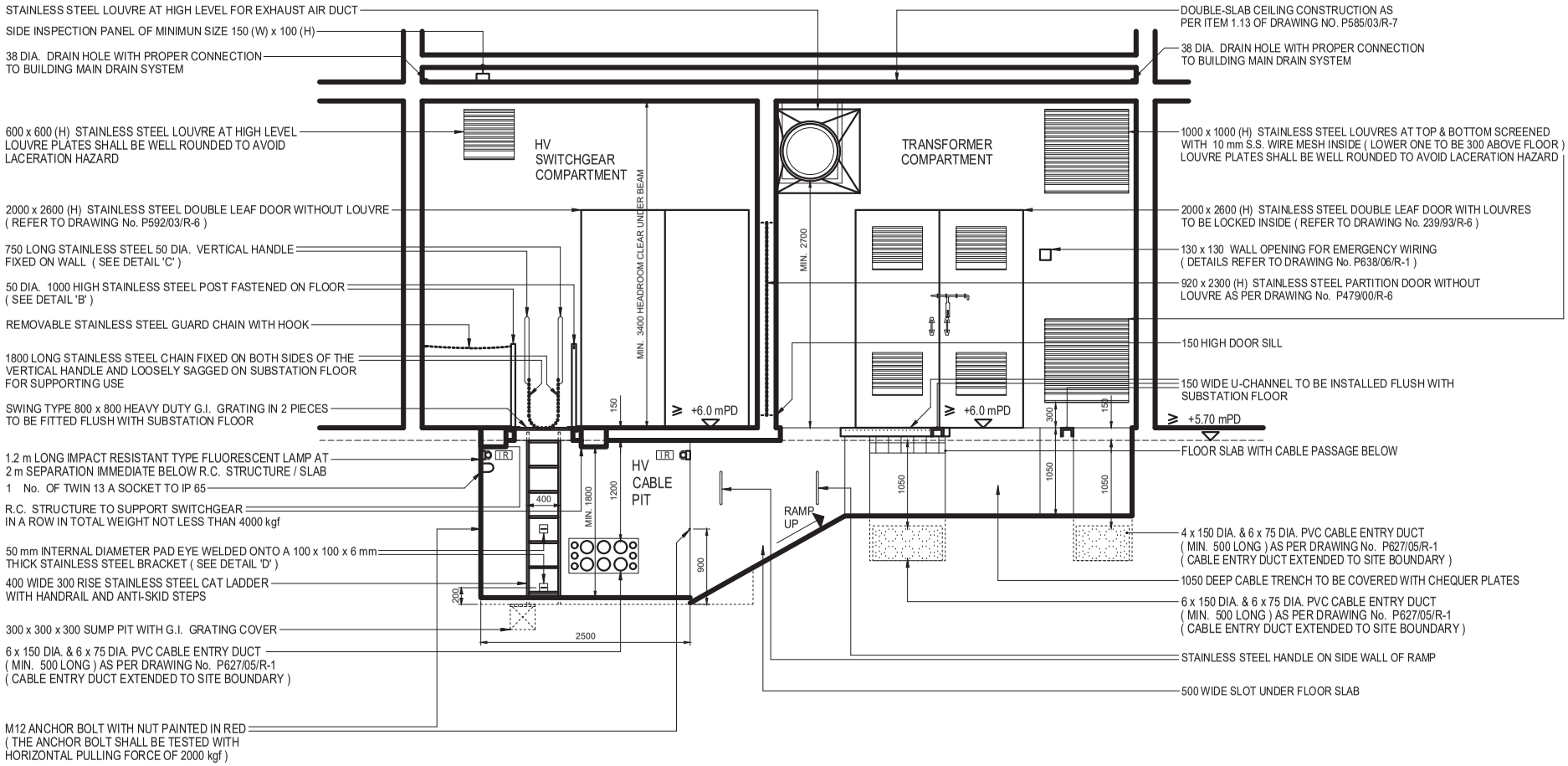

SECTION 'B' - 'B'

NOTE : ALL DIMENSIONS ARE IN mm.

Drg. No. GCS/3/12

TYPICAL LAYOUT FOR 1 - TX. SUBSTATION WITH HV CABLE PIT (P512/00/R-9) SHEET 3 OF 9

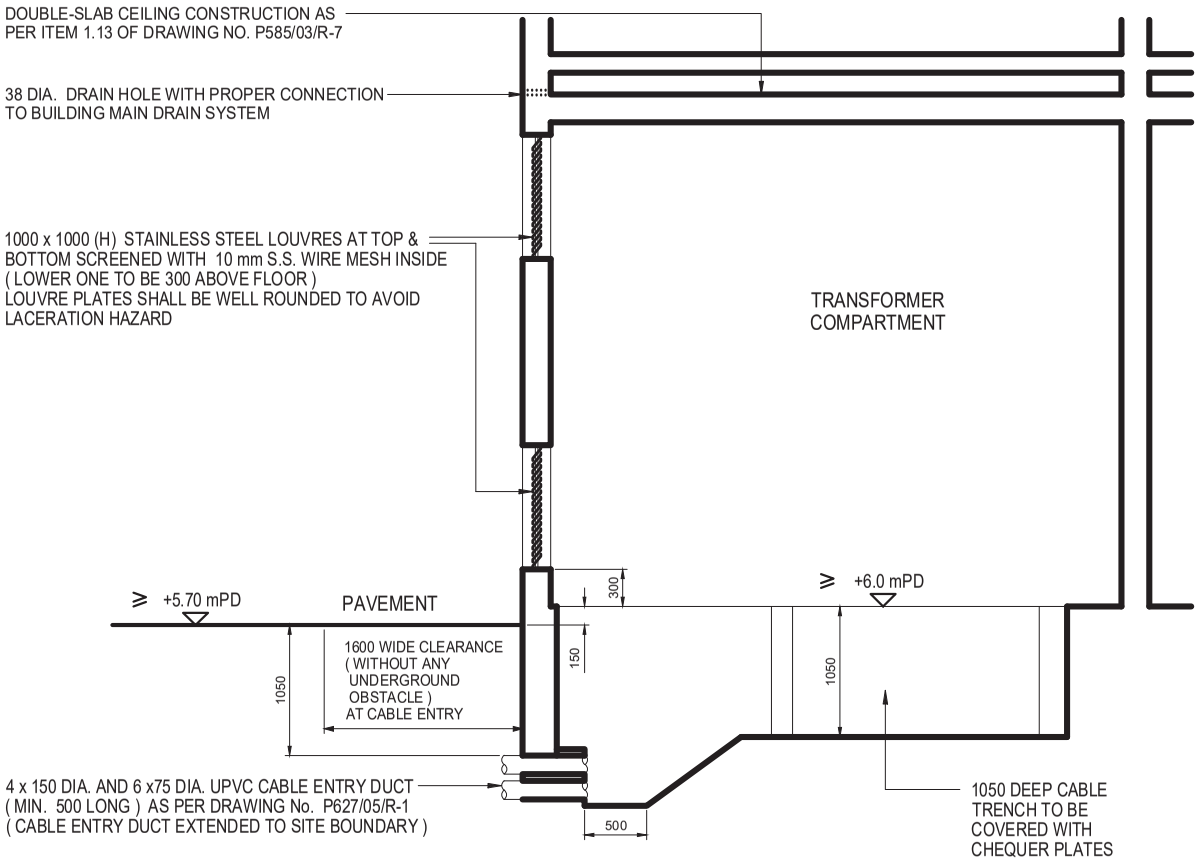

SECTION 'C' - 'C'

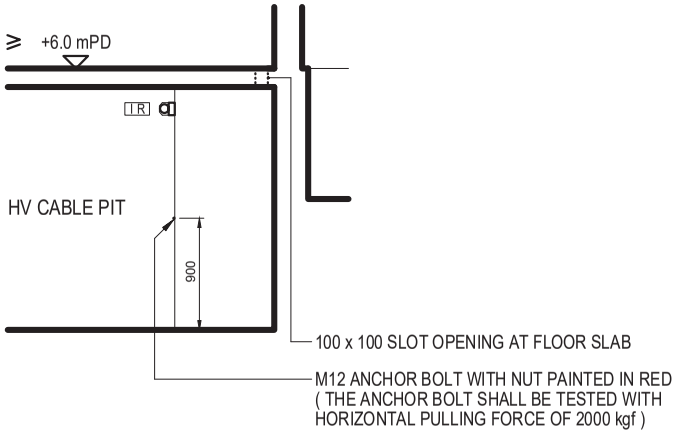

SECTION 'D' - 'D'

NOTE : ALL DIMENSIONS ARE IN mm.

Drg. No. GCS/3/12

TYPICAL LAYOUT FOR 1 - TX. SUBSTATION WITH HV CABLE PIT

(P512/00/R-9) SHEET 4 OF 9

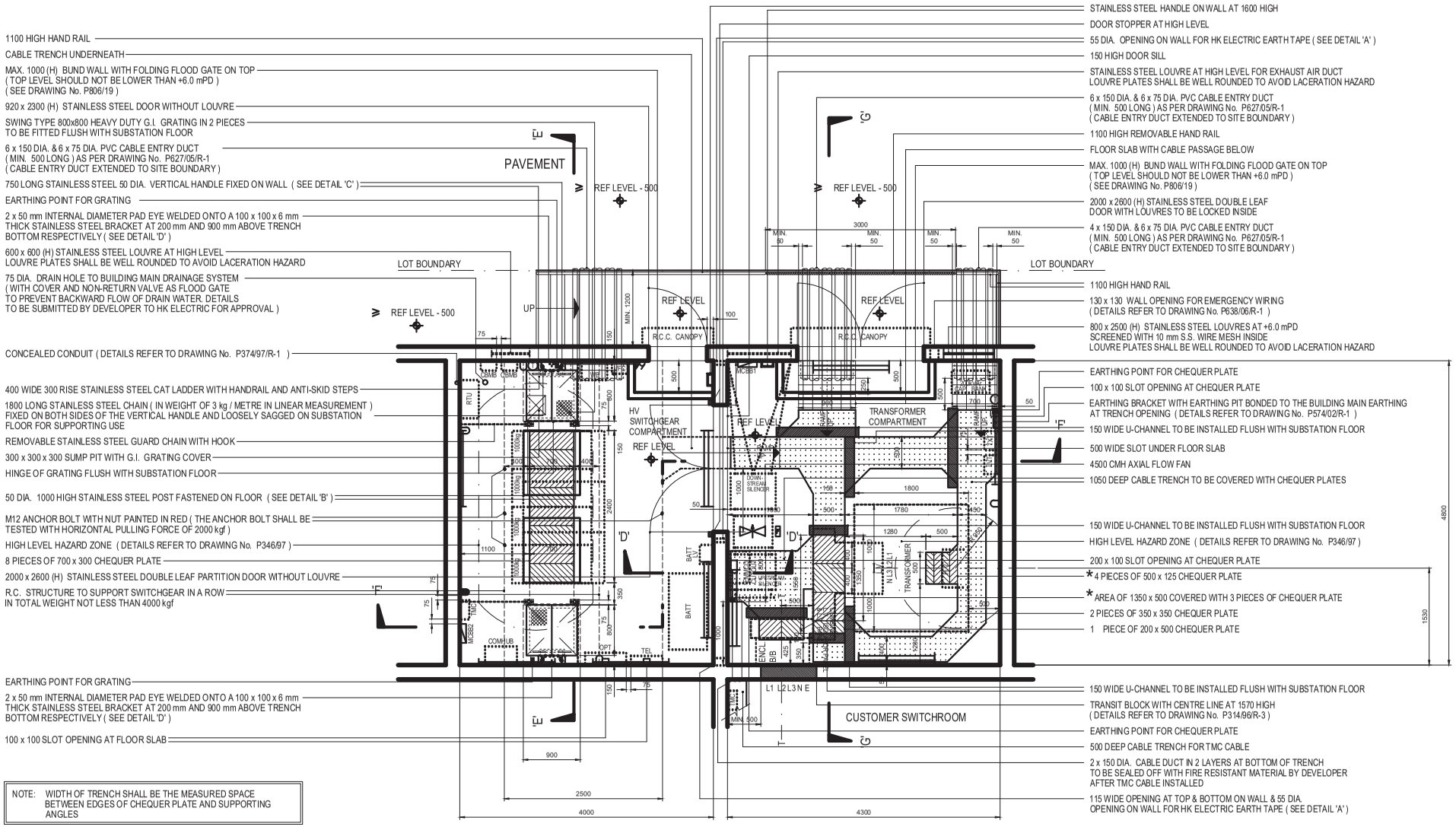

NOTE: WIDTH OF TRENCH SHALL BE THE MEASURED SPACE BETWEEN EDGES OF CHEQUER PLATE AND SUPPORTING ANGLES

OPTION 2

PLAN OF TRANSFORMER COMPARTMENT & HV SWITCHGEAR COMPARTMENT

(FOR LEVEL DIFFERENCE BETWEEN SUBSTATION FLOOR AND OUTSIDE PAVEMENT > 300 mm)

Drg. No. GCS/3/12

TYPICAL LAYOUT FOR 1 - TX. SUBSTATION WITH HV CABLE PIT (P512/00/R-9) SHEET 5 OF 9

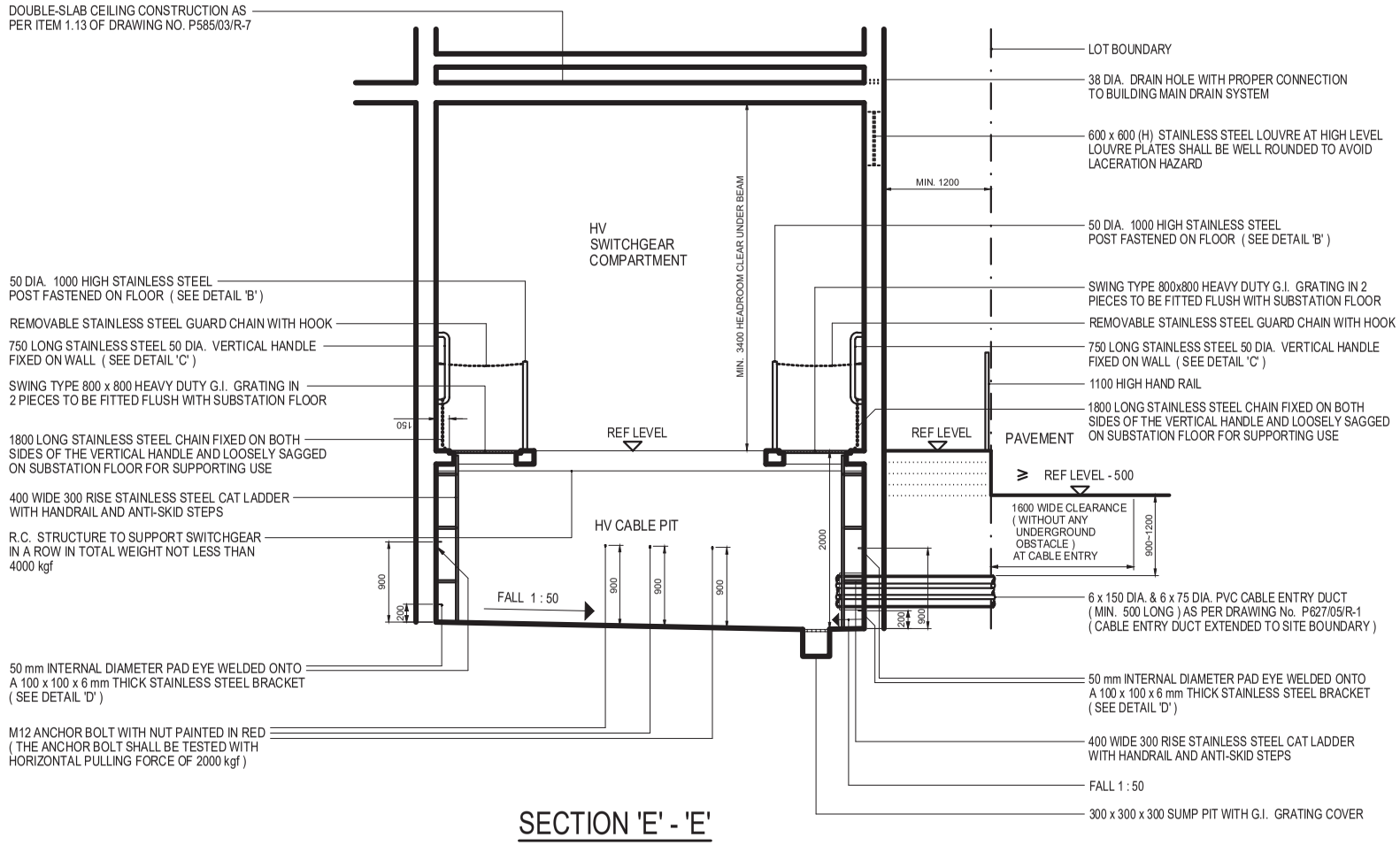

SECTION 'E' - 'E'

NOTE : ALL DIMENSIONS ARE IN mm.

Drg. No. GCS/3/12

TYPICAL LAYOUT FOR 1 - TX. SUBSTATION WITH HV CABLE PIT

(P512/00/R-9) SHEET 6 OF 9

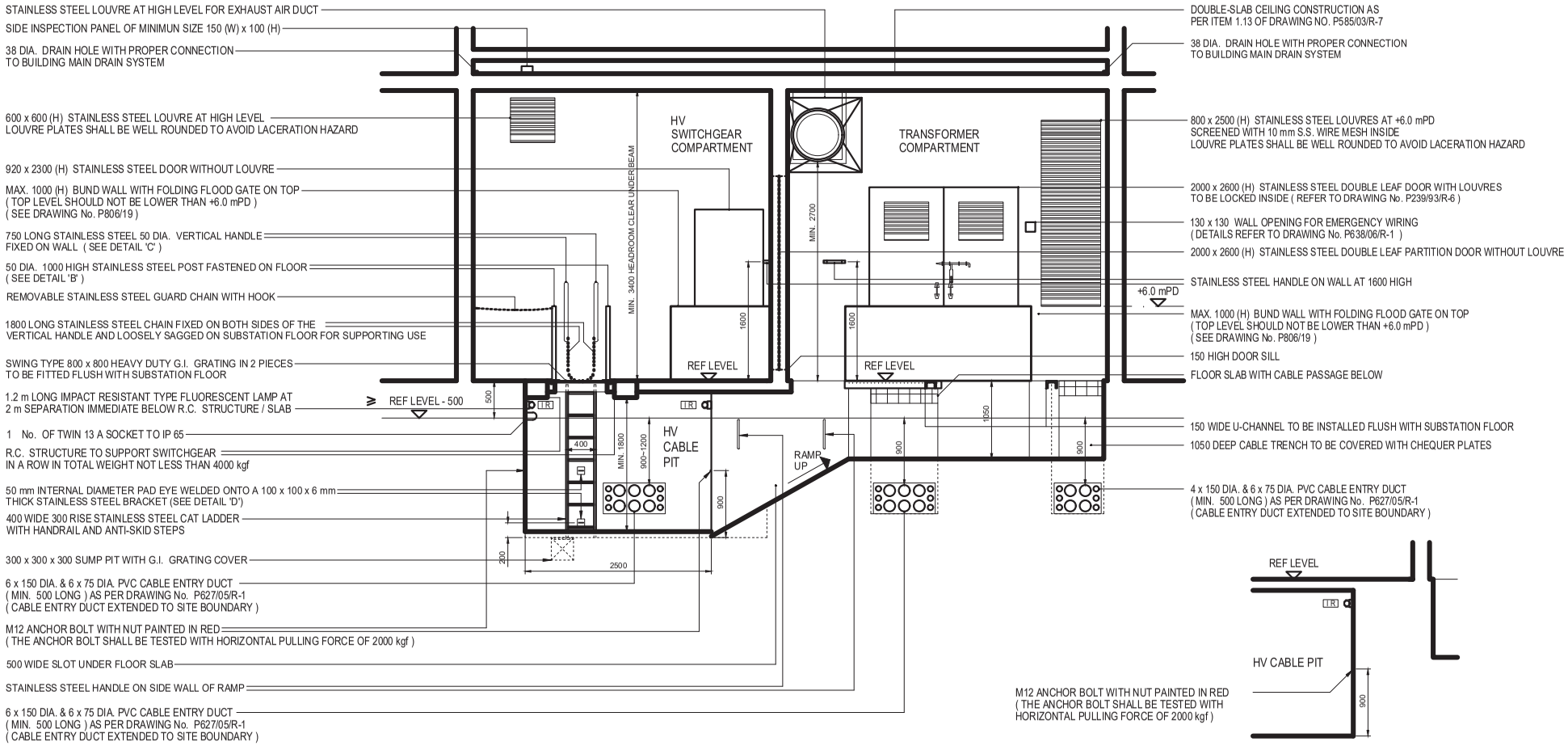

NOTE : ALL DIMENSIONS ARE IN mm.

Drg. No. GCS/3/12
TYPICAL LAYOUT FOR 1 - TX. SUBSTATION WITH HV CABLE PIT (P512/00/R-9) SHEET 7 OF 9

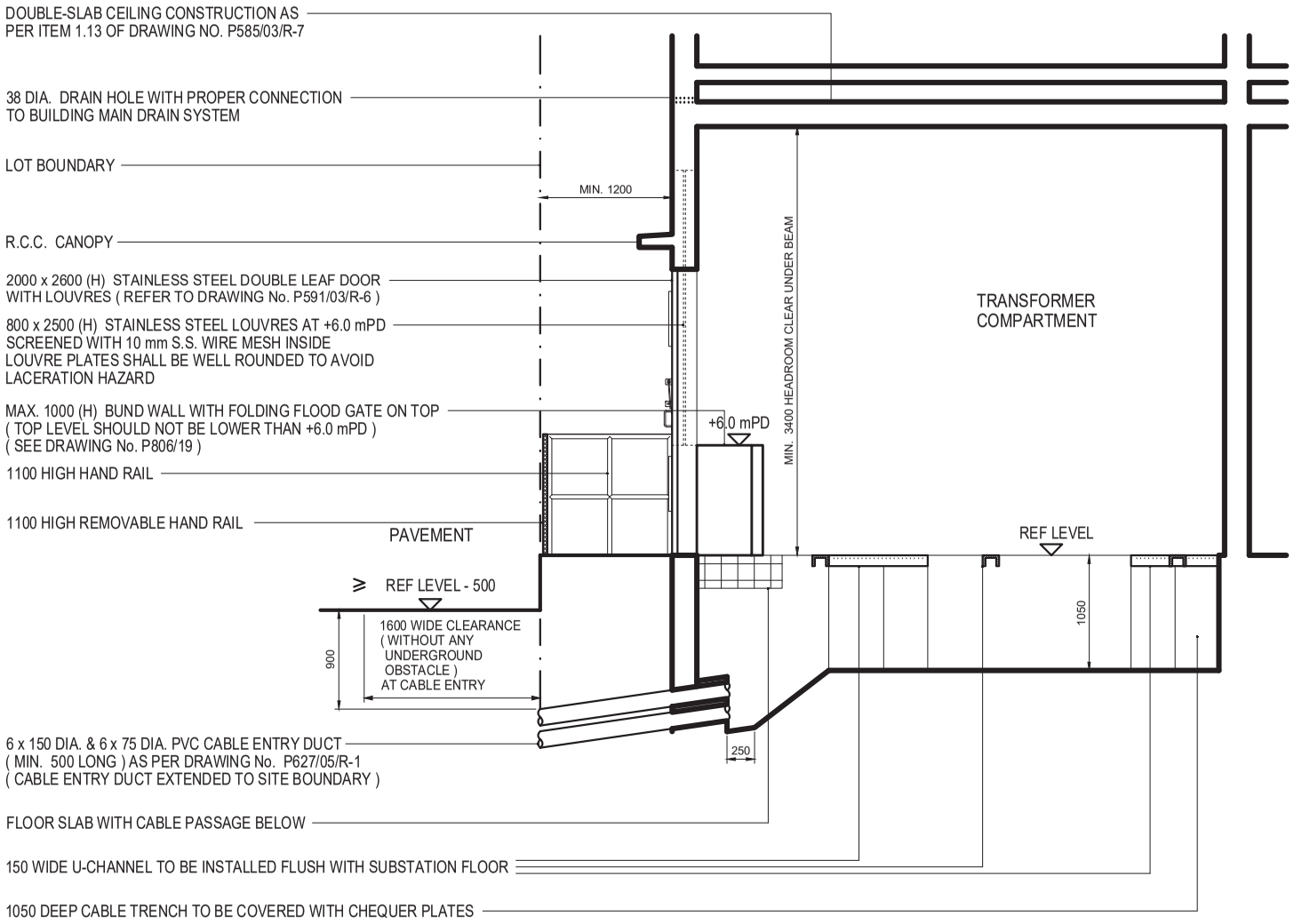

SECTION 'G' - 'G'

NOTE : ALL DIMENSIONS ARE IN mm.

Drg. No. GCS/3/12

TYPICAL LAYOUT FOR 1 - TX. SUBSTATION WITH HV CABLE PIT (P512/00/R-9) SHEET 8 OF 9

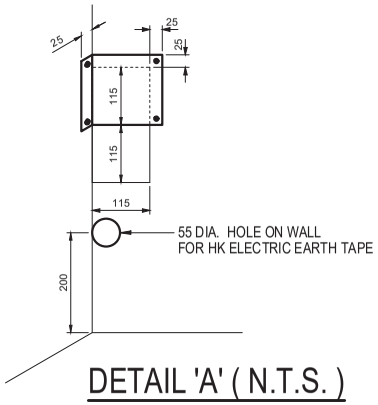

DETAIL 'A' (N.T.S.)

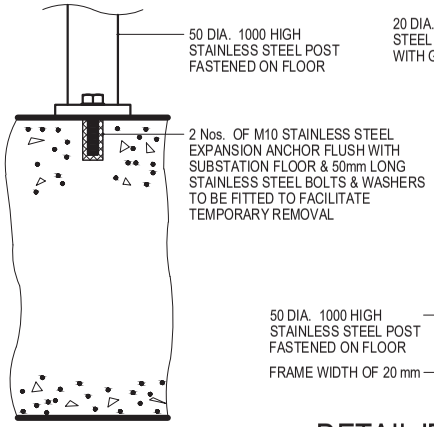

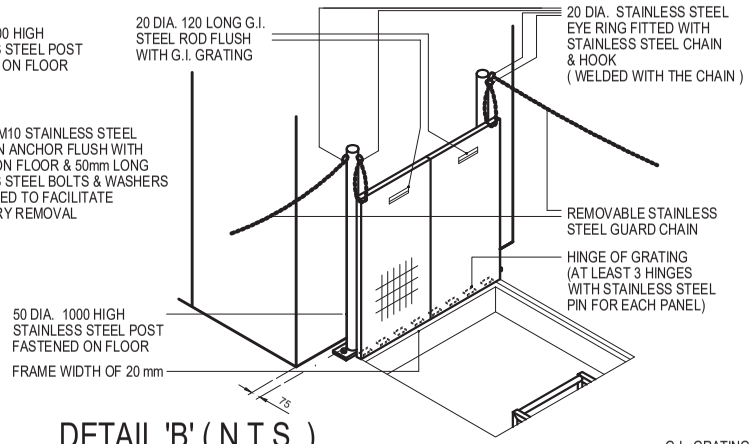

DETAIL 'B' (N.T.S.)

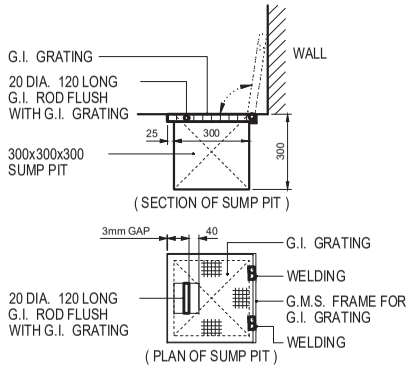

DETAIL 'F' (N.T.S.)

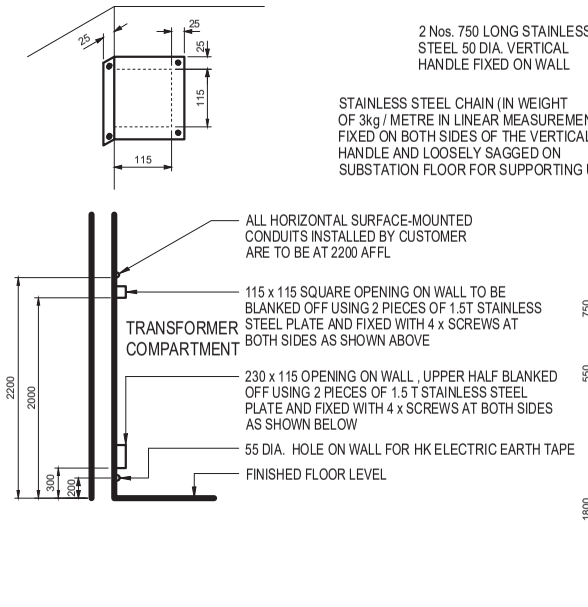

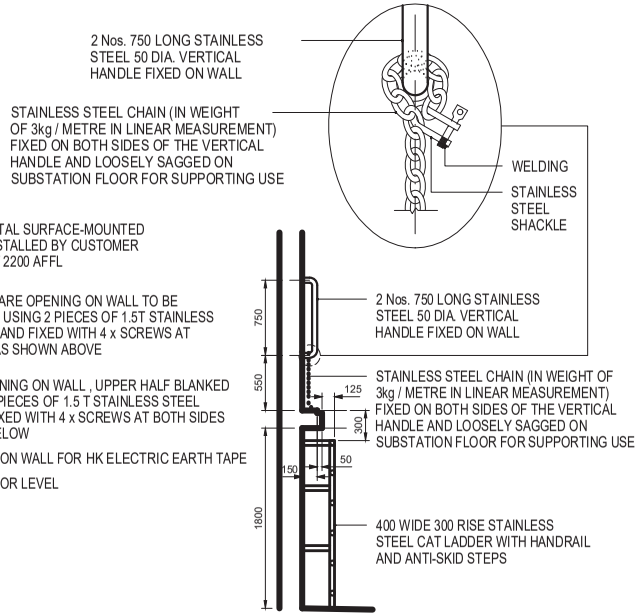

DETAIL 'C' (N.T.S.)

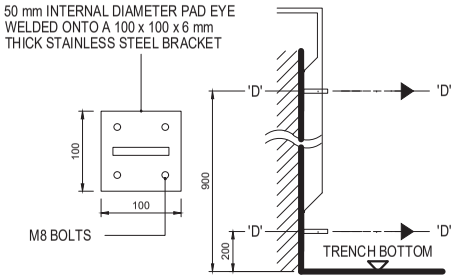

A. 50 mm INTERNAL DIAMETER PAD EYE WELDED ONTO A 100 x 100 x 6 mm THICK STAINLESS STEEL BRACKET

B. THE BACKET SHOULD BE FIXED ON WALL BY 4 NOS. OF M8 EXPANSION ANCHORS AND STAINLESS STEEL BOLTS COMPLETED WITH PLAIN AND SPRING WASHERS

C. A HORIZONTAL PULLING FORCE IN DIRECTION ALONG THE CENTRE LINE 'D' - 'D' WILL BE APPLIED TO THE PAD EYE. THE PAD EYE SHALL BE SUITABLE FOR A "SAFE WORKING LOAD" OF 2000 kgf. HOWEVER THE "TESTING LOAD" SHALL BE 4000 kgf.

DETAIL 'D' (N.T.S.)

NOTE : ALL DIMENSIONS ARE IN mm.

Drg. No. GCS/3/12

TYPICAL LAYOUT FOR 1 - TX. SUBSTATION WITH HV CABLE PIT

(P512/00/R-9) SHEET 9 OF 9

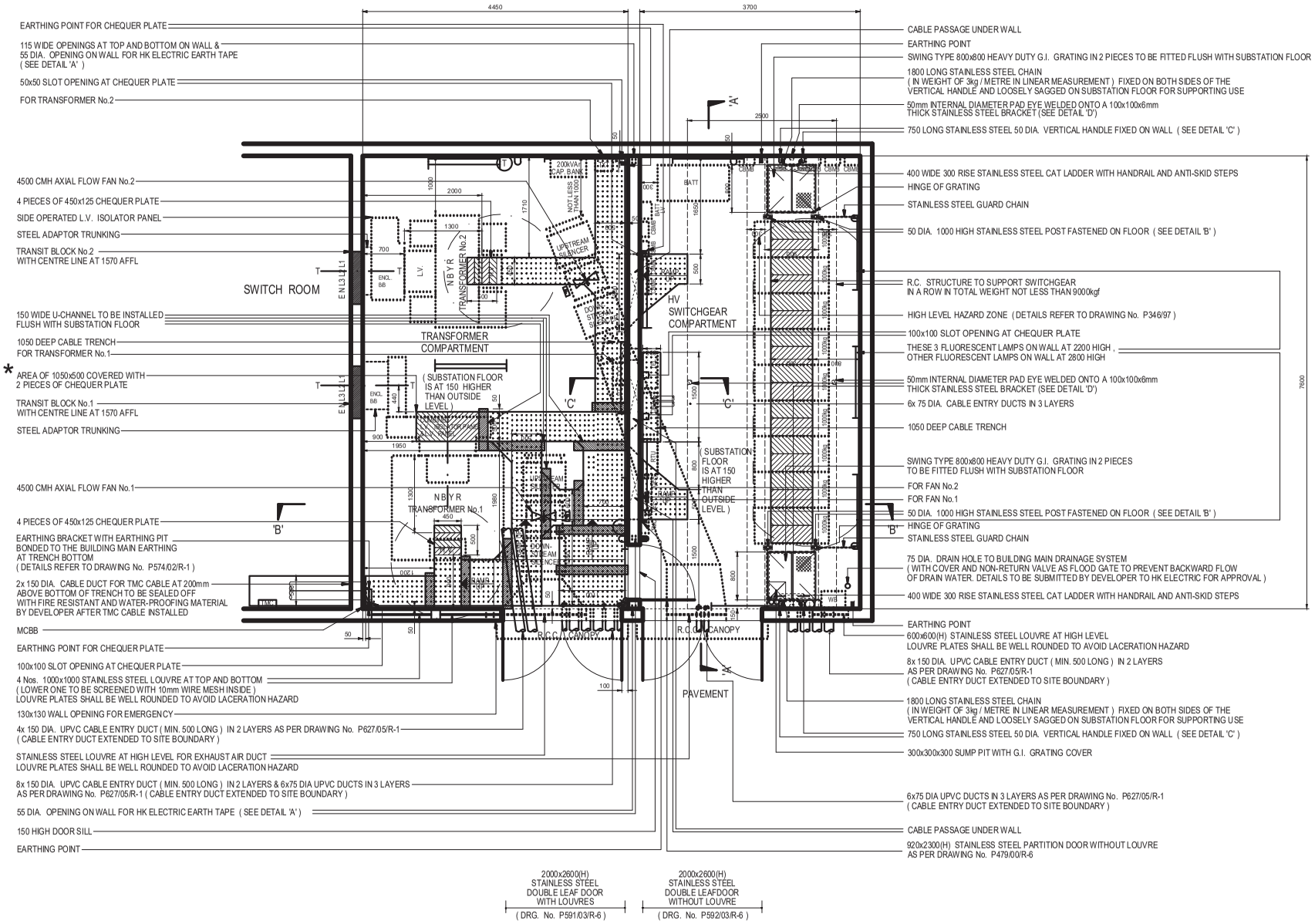

PLAN

NOTE : ALL DIMENSIONS ARE IN mm.

Drg. No. GCS/3/13

TYPICAL LAYOUT FOR TWIN TRANSFORMER SUBSTATION WITH HV CABLE PIT (P584/03/R-3) SHEET 1 OF 4

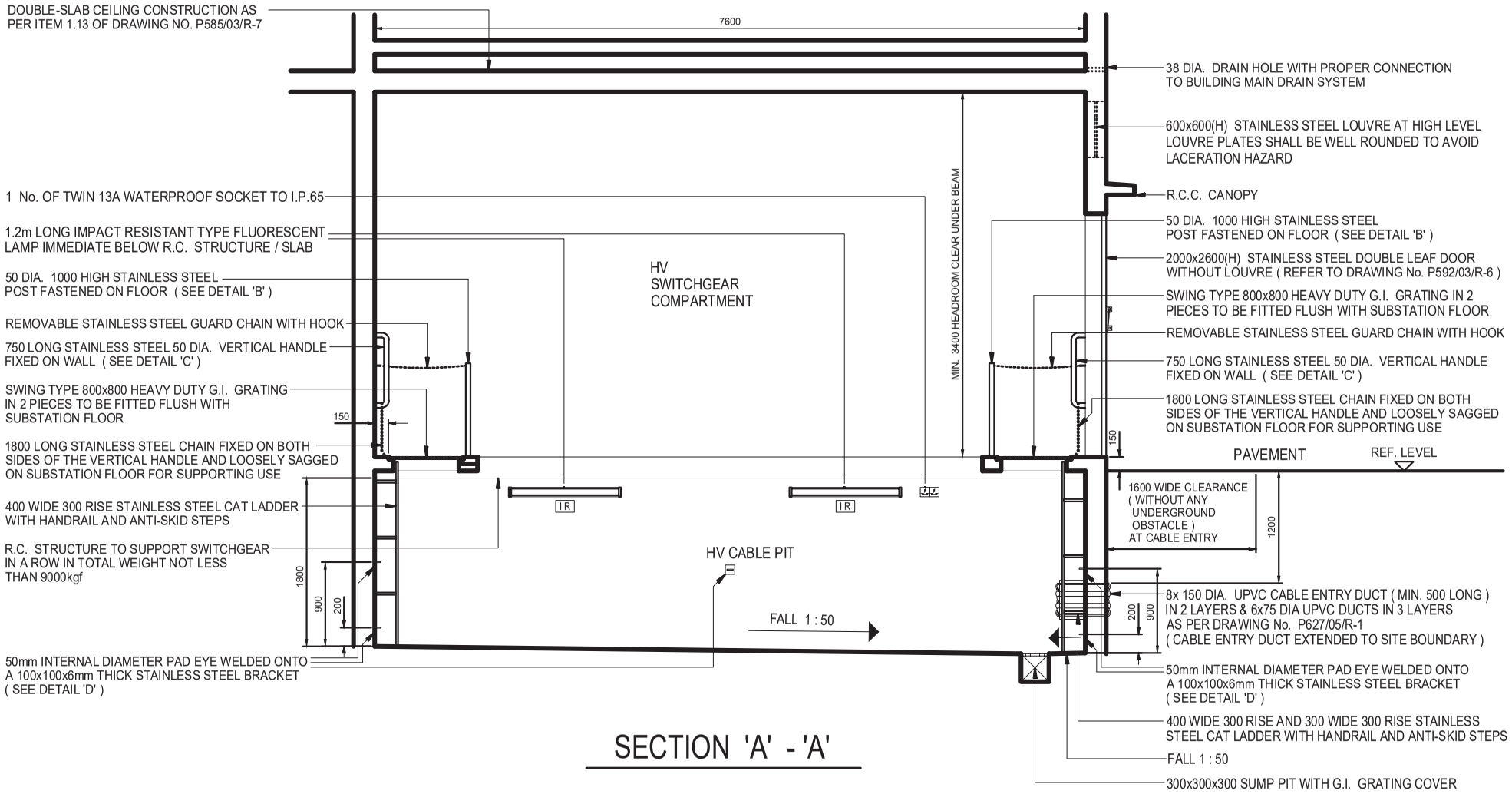

SECTION 'A' - 'A'

NOTE : ALL DIMENSIONS ARE IN mm.

Drg. No. GCS/3/13

TYPICAL LAYOUT FOR TWIN TRANSFORMER SUBSTATION WITH HV CABLE PIT (P584/03/R-3) SHEET 2 OF 4

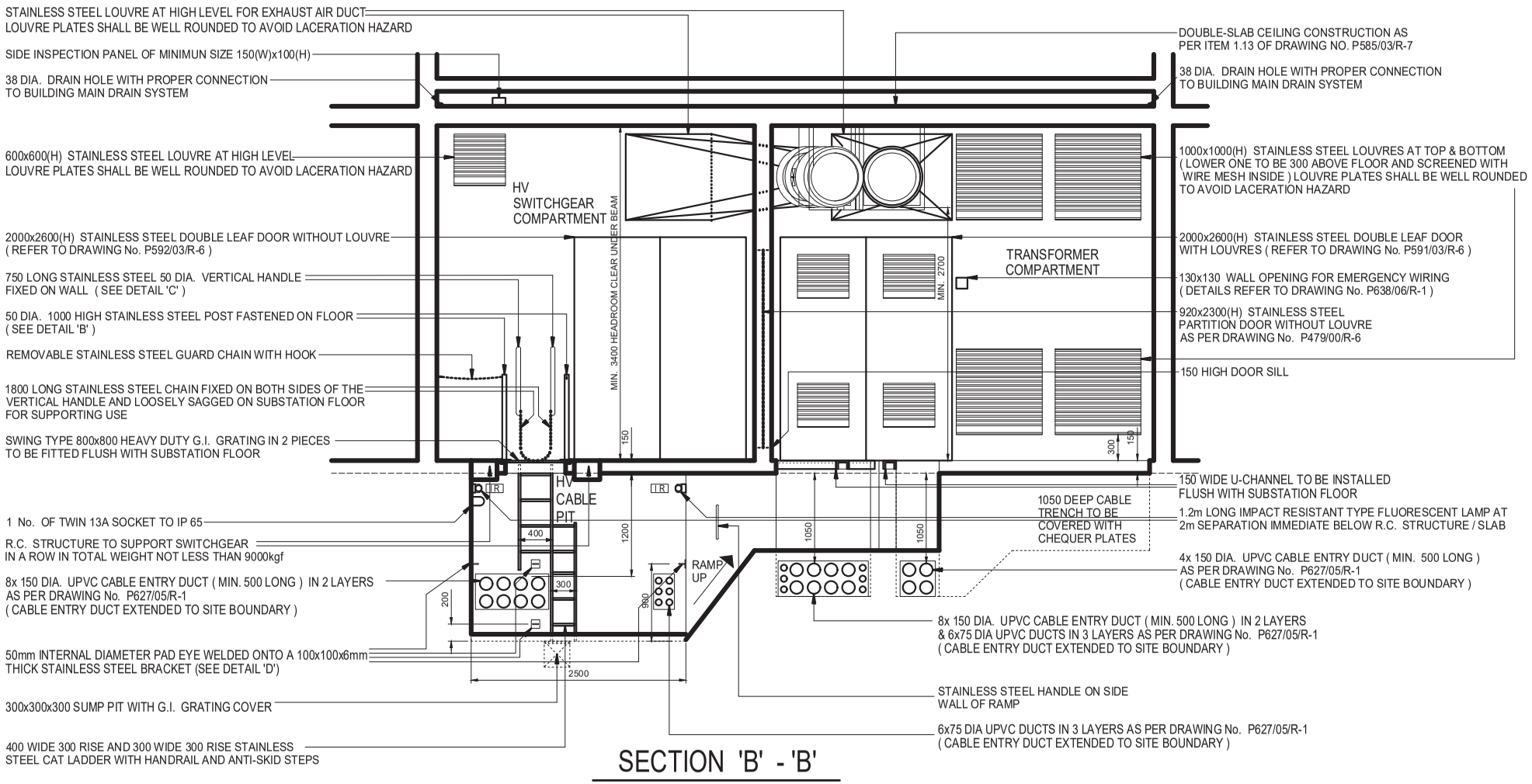

NOTE : ALL DIMENSIONS ARE IN mm.

Drg. No. GCS/3/13

TYPICAL LAYOUT FOR TWIN TRANSFORMER SUBSTATION WITH HV CABLE PIT (P584/03/R-3) SHEET 3 OF 4

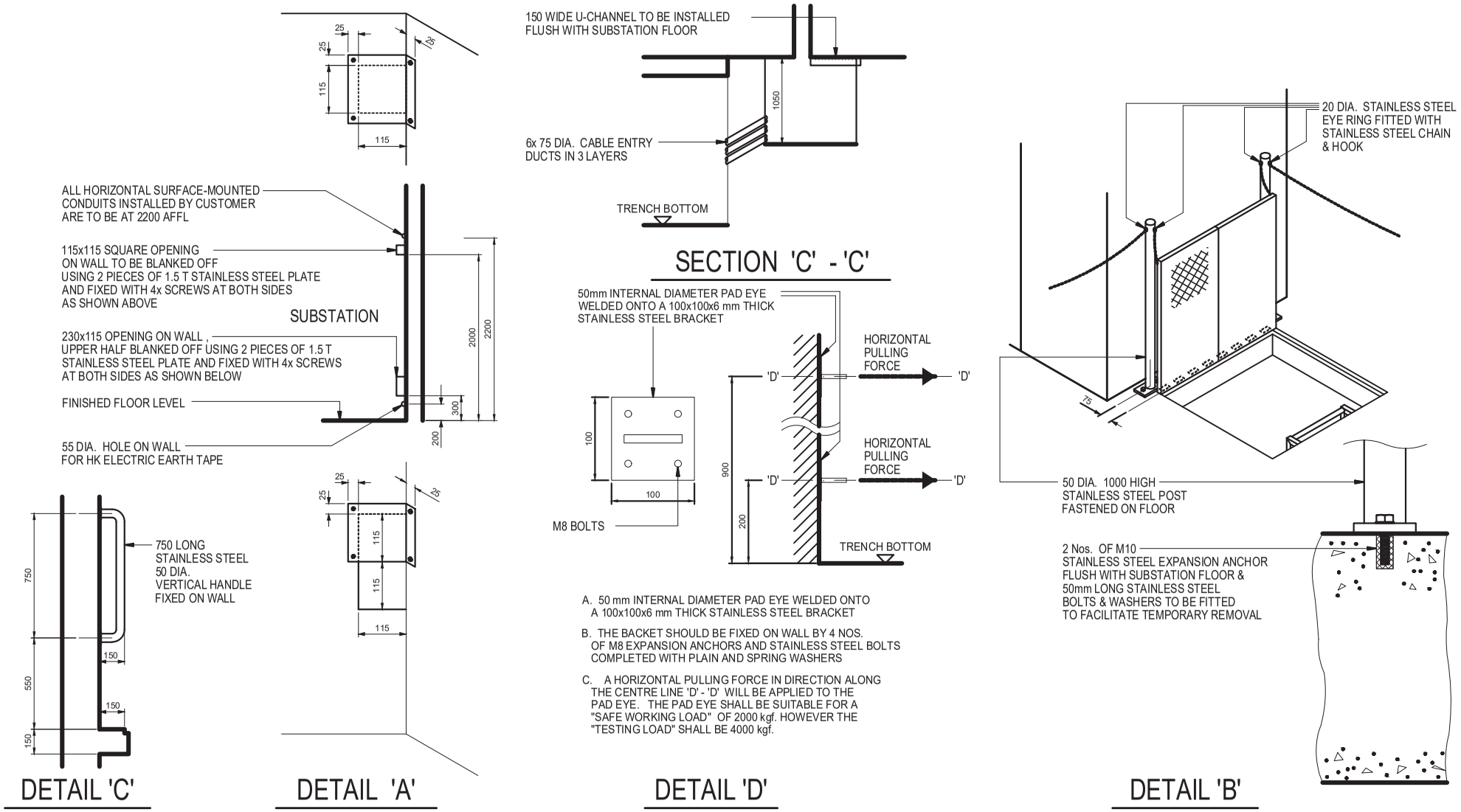

NOTE : ALL DIMENSIONS ARE IN mm.

Drg. No. GCS/3/13

TYPICAL LAYOUT FOR TWIN TRANSFORMER SUBSTATION WITH HV CABLE PIT (P584/03/R-3) SHEET 4 OF 4

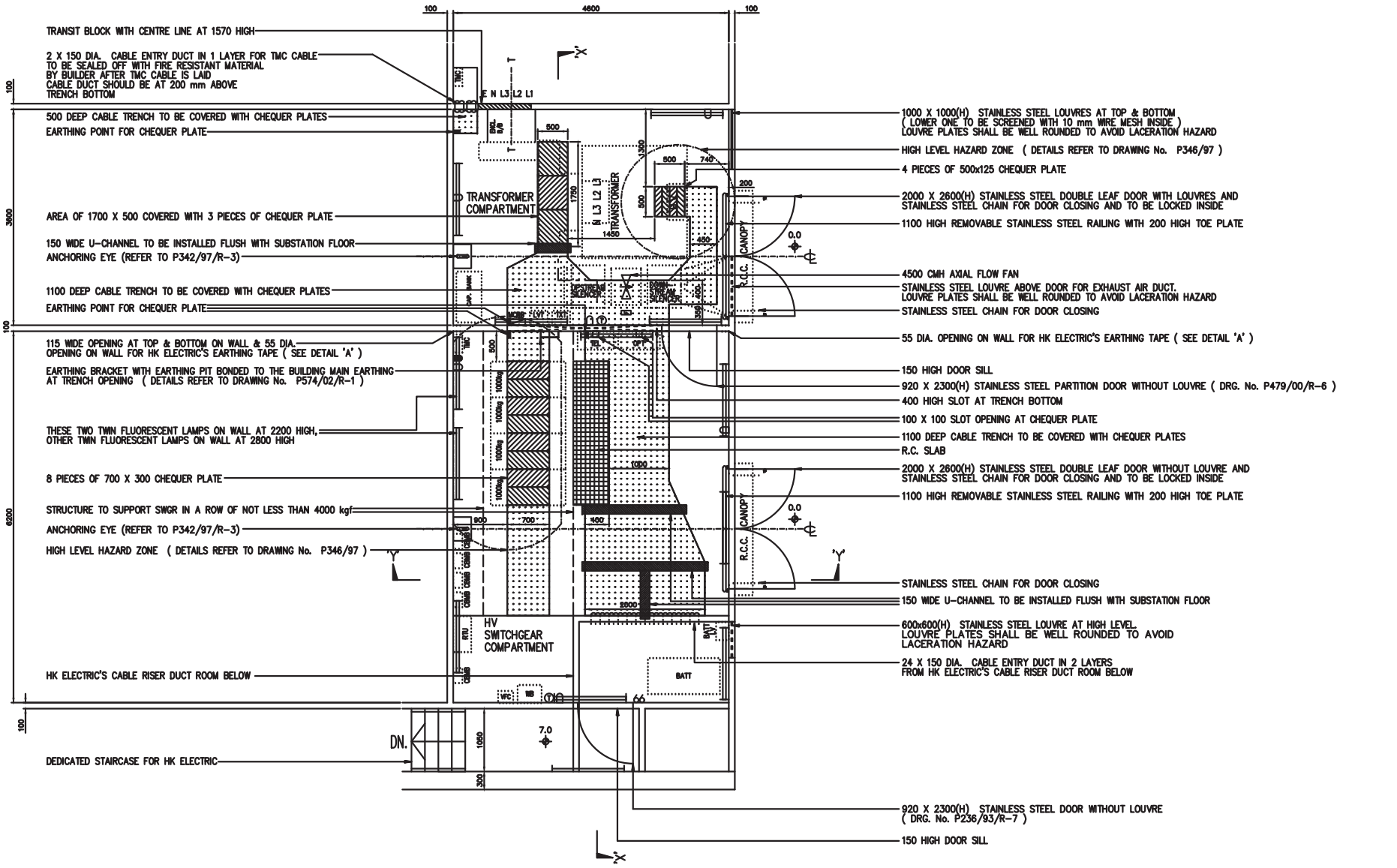

PLAN OF FIRST LEVEL SUBSTATION

NOTE : ALL DIMENSIONS ARE IN mm.

Drg. No. GCS/3/14

TYPICAL LAYOUT FOR SINGLE TRANSFORMER FIRST LEVEL SUBSTATION WITH HV & LV COMPARTMENTS (P381/98/R-6) SHEET 1 OF 6

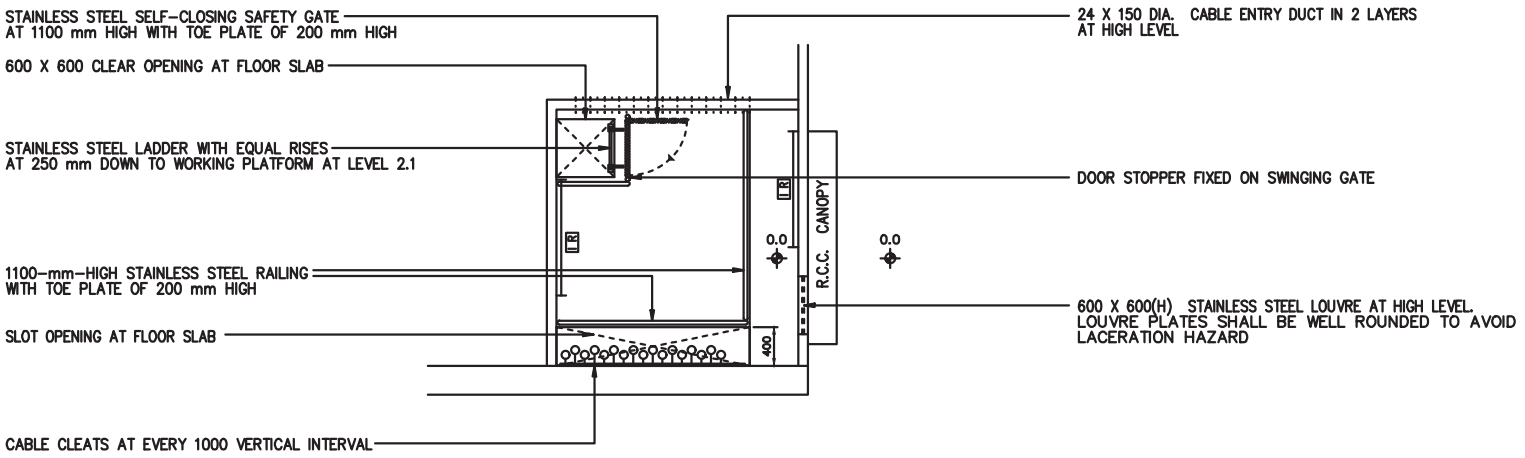

PLAN OF WORKING PLATFORM AT LEVEL 4.3

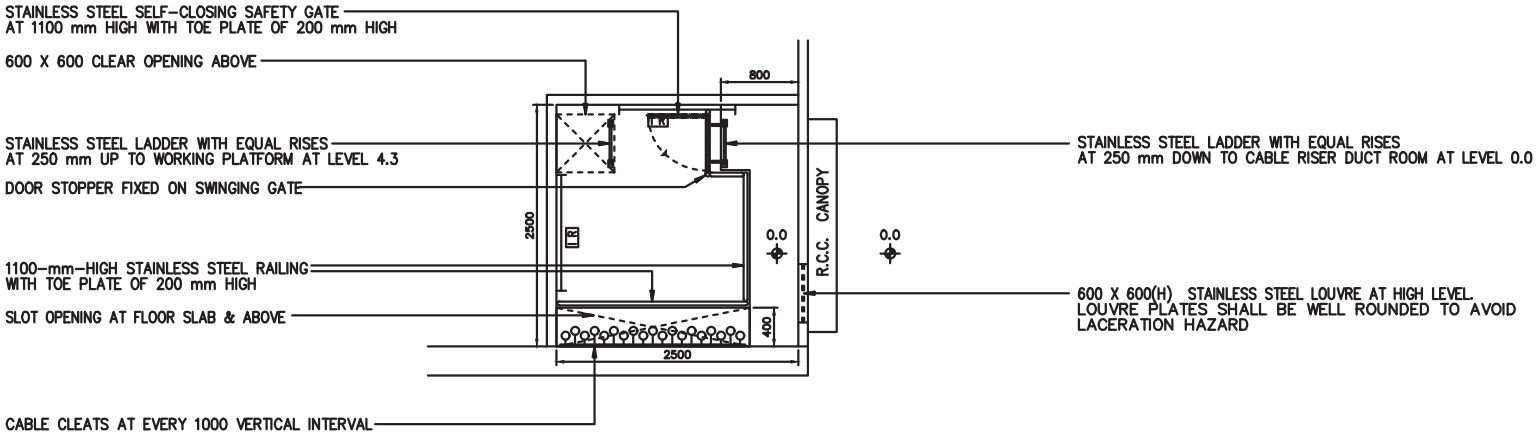

PLAN OF WORKING PLATFORM AT LEVEL 2.1

NOTE : ALL DIMENSIONS ARE IN mm.

Drg. No. GCS/3/14

TYPICAL LAYOUT FOR SINGLE TRANSFORMER FIRST LEVEL SUBSTATION WITH HV & LV COMPARTMENTS (P381/98/R-6) SHEET 2 OF 6

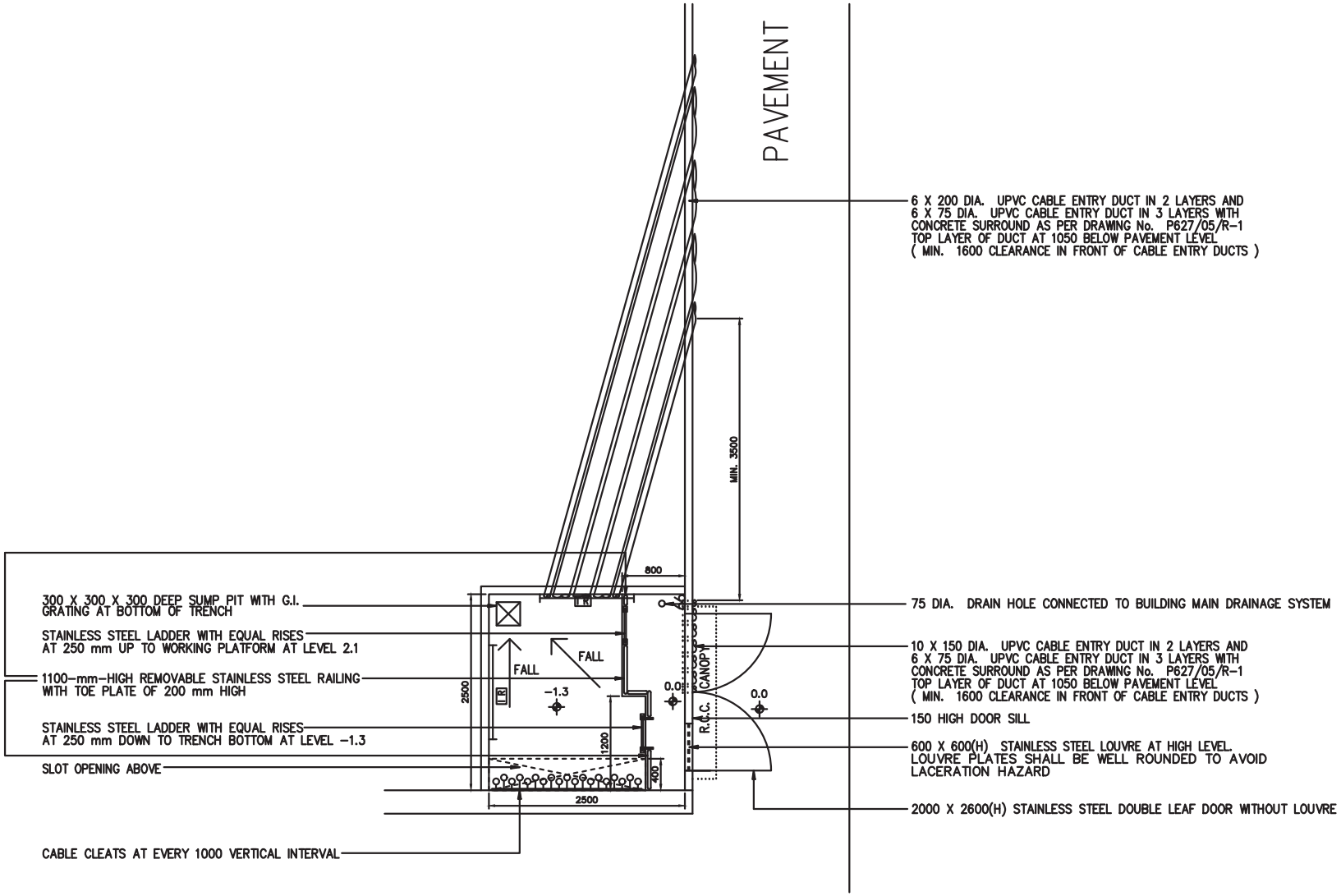

PLAN OF HK ELECTRIC'S CABLE RISER DUCT ROOM AT G/F

NOTE : ALL DIMENSIONS ARE IN mm.

Drg. No. GCS/3/14

TYPICAL LAYOUT FOR SINGLE TRANSFORMER FIRST LEVEL SUBSTATION WITH HV & LV COMPARTMENTS (P381/98/R-6) SHEET 3 OF 6

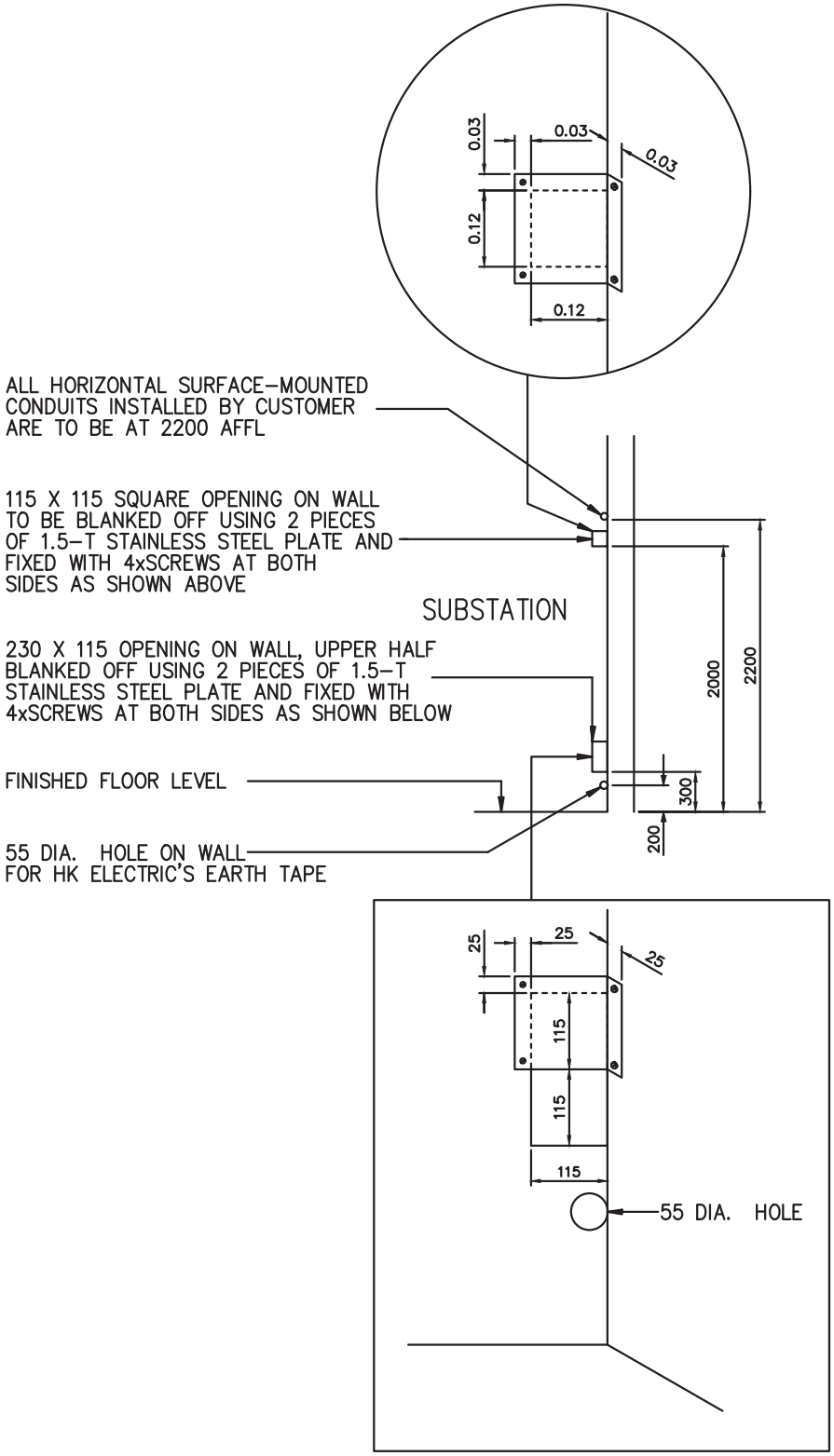

DETAIL 'A'
(NOT TO SCALE)

NOTE : ALL DIMENSIONS ARE IN mm.

DRG. NO. GCS/3/14

TYPICAL LAYOUT FOR SINGLE TRANSFORMER FIRST LEVEL SUBSTATION WITH HV & LV COMPARTMENTS (P381/98/R-6) SHEET 4 OF 6

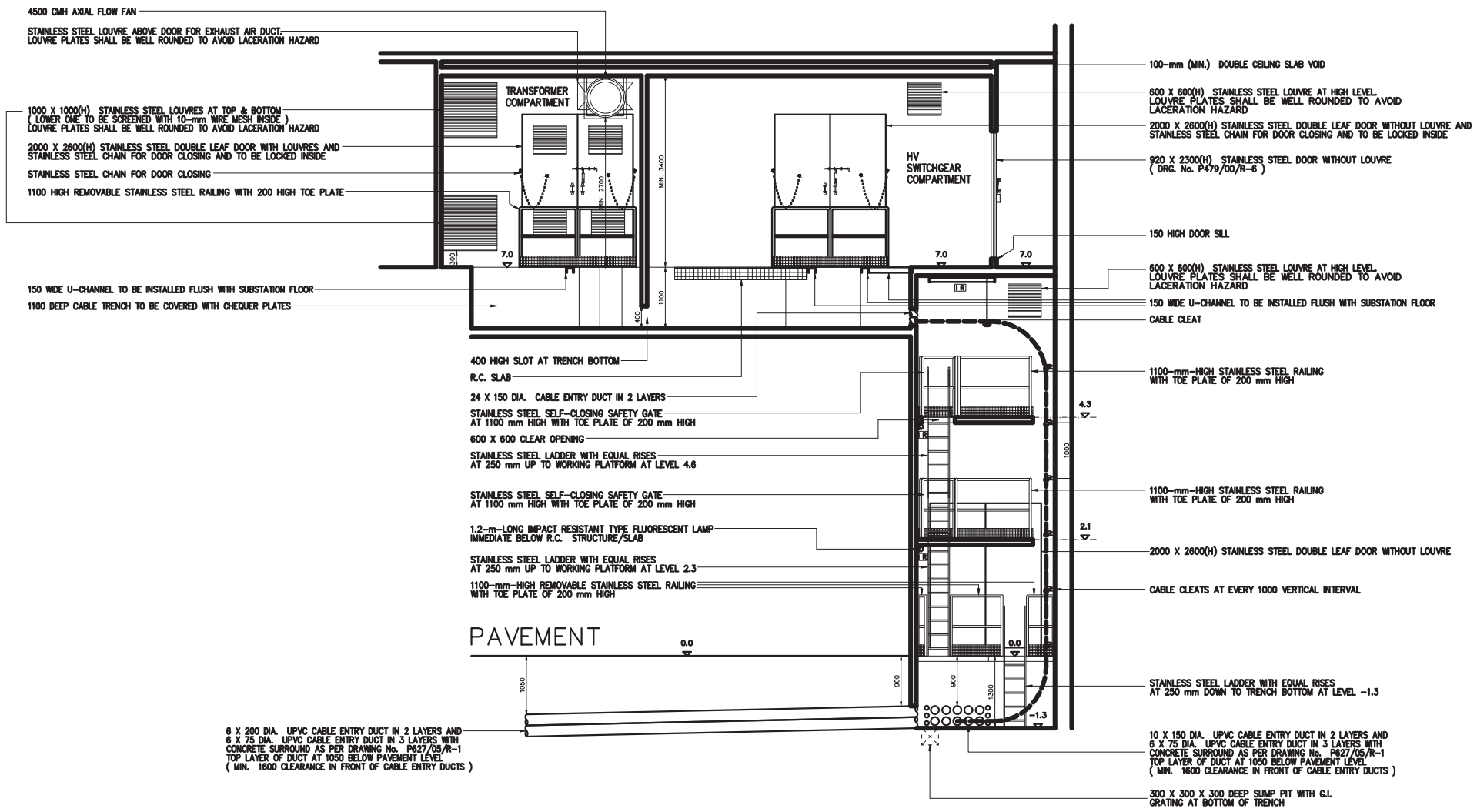

SECTION 'X – 'X'

NOTE : ALL DIMENSIONS ARE IN mm.

Drg. No. GCS/3/14

TYPICAL LAYOUT FOR SINGLE TRANSFORMER FIRST LEVEL SUBSTATION WITH HV & LV COMPARTMENTS (P381/98/R-6) SHEET 5 OF 6

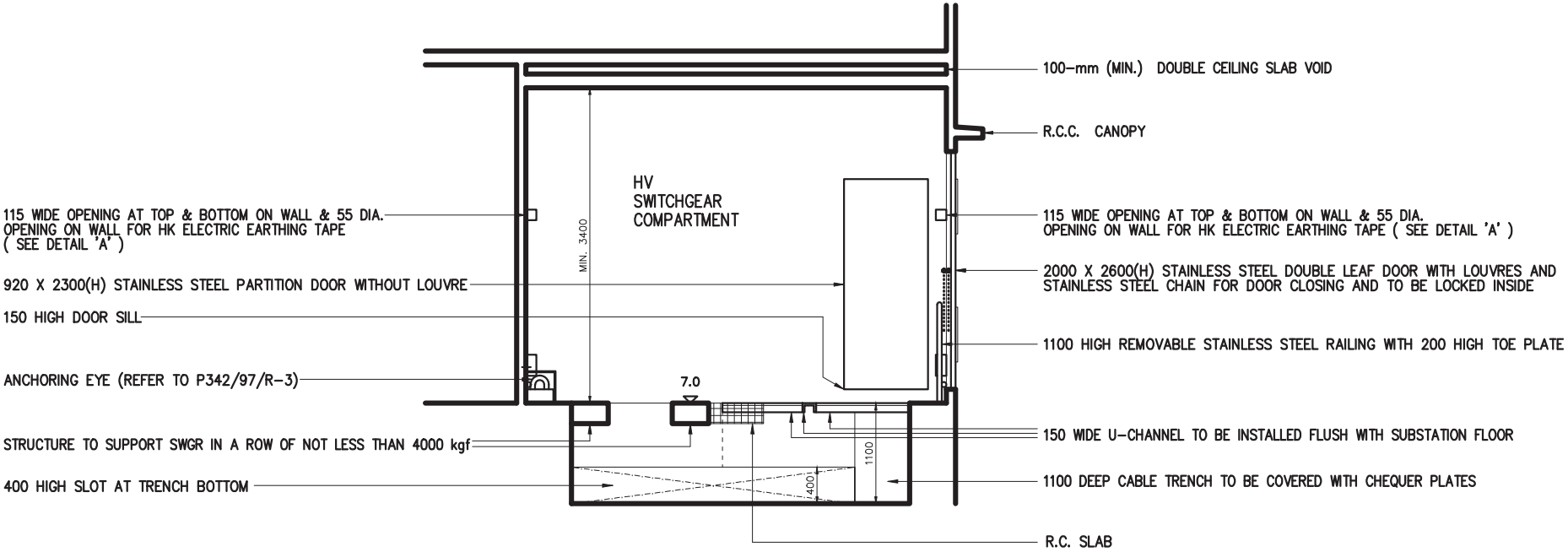

SECTION 'Y' – 'Y'

NOTE : ALL DIMENSIONS ARE IN mm.

Drg. No. GCS/3/14

TYPICAL LAYOUT FOR SINGLE TRANSFORMER FIRST LEVEL SUBSTATION WITH HV & LV COMPARTMENTS (P381/98/R-6) SHEET 6 OF 6

LEGEND FOR DRAWING NOS. GCS/3/12, GCS/3/13 AND GCS/3/14

ENCL. B/B = L.V. BUSBARS ENCLOSED IN STEEL ADAPTER TRUNKING OF L.V. PANEL
WB = STAINLESS STEEL WRITING BOARD (400W x 300D AT 1200 AFFL)
CAP BANK = FLOOR MOUNTED 200 KVAR POWER FACTOR CORRECTION EQUIPMENT
VFC = VENT FAN CONTROL BOX WITH BUILT-IN ISOLATOR SWITCH (250W x 1000H x 200D) TO BE PROVIDED BY HK ELECTRIC AND INSTALLED BY CUSTOMER
TEL = TEL/PILOT CABLE MARSHALLING BOX (500W x 870H x 150D)
BATT = BATTERY & CHARGER CUBICLE FOR CIRCUIT BREAKER (1200W x 1900H x 600D)
BATT LV = CUBICLE FOR BATTERY CHARGER LV SUPPLY (300W x 200H x 100D) TO BE SUPPLIED & INSTALLED BY CUSTOMER
OPT = OPTICAL FIBRE CABLE MARSHALLING BOX (650W x 700H x 200D)
RTU = REMOTE TERMINAL UNIT CUBICLE (600W x 1400H x 300D)
CBMB = CIRCUIT BREAKER MARSHALLING BOX (250W x 700H x 150D)
LVT = LV FEEDER TRANSDUCER BOX (300W x 1200H x 250D)
TXT = TRANSFORMER TRANSDUCER BOX (300W x 700H x 250D)
MCBB = MAIN MCB BOARD (MAX. 300 WIDE) BY CUSTOMER
COMHUB = COMMUNICATION HUB CUBICLE (500W x 800H x 300D)
AFFL = ABOVE FINISHED FLOOR LEVEL
TMC = TARIFF METER COMMUNICATION BOX
2 Nos. TO BE PROVIDED BY HK ELECTRIC AND INSTALLED BY CUSTOMER
- SPACE OF 600W x 1200H x 300D SHALL BE RESERVED FOR THE TMC BOX INSIDE SUBSTATION
- A 13 A FUSED SPUR UNIT AT 800 AFFL ADJACENT TO THE TMC BOX INSIDE SUBSTATION BY CUSTOMER (600W x 2000H x 350D)

(T) = TELEPHONE SOCKET (CENTRE AT 1300 AFFL) TO BE PROVIDED BY HK ELECTRIC AND INSTALLED BY CUSTOMER

= TWIN 13 A SOCKET AT 800 AFFL

= 13 A FUSED SPUR UNIT AT 800 AFFL

F = TERMINATION BOX FOR EXHAUST FAN OR AXIAL FLOW FAN

= 1.2 m 40 W FLUORESCENT LAMP AT 2800 AFFL

= TWIN 1.2 m 40 W FLUORESCENT LAMP AT 2800 AFFL

= LIGHTING SWITCH AT 1400-1600 AFFL (HV CABLE PIT LIGHTING)

= TWO WAY LIGHTING SWITCH AT 1400-1600 AFFL (SUBSTATION LIGHTING)

= CABLE TRENCH TO BE COVERED WITH CHEQUER PLATES

= CHEQUER PLATES FABRICATED TO DIMENSIONS SPECIFIED. VERTICAL SUPPORT SHOULD NOT BE INSTALLED UNDER THE CHEQUER PLATES MARKED WITH AN ' * '.

Notes for Drawing Nos. GCS/3/12, GCS/3/13 & GCS/3/14

DETAILED REQUIREMENTS OF SUBSTATION

1. BUILDER'S WORK

1.1 No construction joint nor expansion joint shall be constructed within a substation and at the substation enclosure.

1.2 Unless otherwise specified in the substation layout drawing, the substation floor level should be at or above +6.0 m P.D. and substation shall have a clear headroom of 3400 mm. The substation floor shall be designed and constructed to withstand the weight of transformer, its associated HV switchgear and control equipment, each set of which is 10,000 kgf. The substation structure shall be designed to an average floor loading of not less than 20 kPa. Also all the floor area within the substation must be capable of withstanding a concentrated load of 100 kN over two Nos. of 40-mm x 600-mm rectangular strips which are the bottom channels of the above equipment. For those substations to be installed with HV switchgear only or those substations with a separate compartment solely for housing HV switchgear only, the substation floor designed to an average floor loading of not less than 10 kPa to withstand the weight of HV switchgear in such substations can be accepted. Before handing over the substation, the architect must submit detailed structural drawings, structure calculation and a certificate duly signed by a registered structural engineer, indicating that the substation structure has been designed and constructed to such requirements for HK Electric record.

1.3 The wall and ceiling of substation must be of construction including material and thickness, etc., complying with regulations of Fire Services Department (FSD) and Buildings Department. The substation wall shall preferably be of reinforced concrete construction, but brick of clay to BS.3921, concrete brick to BS.6073 can also be accepted. Hollow blockwork in the substation will not be accepted.

1.4 The substation wall and ceiling shall be cemented, sand plastered and finished with one coat of liquid prepolymer sealer and two finishing coats of acrylic resin based coating in gloss white finish. Substation floor shall be cemented, sand rendered in trowelled smooth finish. For anti-skid reasons, no coating nor painting shall be applied on the substation floor.

1.5 Non-slip strip inserts shall be installed at the edges of steps as specified in the latest edition of "General Specification for Building" by Architectural Services Department (ASD) of Hong Kong SAR Government, at:

i. staircase within the area to be locked up by HK Electric; and

ii. staircase outside the area to be locked up by HK Electric, but forming part of the route of escape for the substation.

Notes for Drawing Nos. GCS/3/12, GCS/3/13 & GCS/3/14

1.6 Substation wall and ceiling shall be finished to a true plane and to correct line and level. Maximum deviation permitted in surfaces shall be 3 mm from a 1800-mm straight edge. Substation floor shall be finished to a true plane and to extremely correct line and level. Maximum deviation permitted in surfaces of substation floor shall be 2 mm from a 1800-mm straight edge. For steelwork, maximum deviation shall be 2 mm from a 1800-mm straight edge.

1.7 Unless otherwise specified by HK Electric, all the building work, structural work and steelwork for the substation shall comply with the latest edition of "General Specification for Building" by ASD.

1.8 Unless otherwise specified by HK Electric, all exposed steelwork for substation shall be hot dip galvanized to BS EN ISO 1461.

1.9 Unless otherwise specified, all trenches shall be covered with 7-mm-thick hot dip galvanised steel chequer plates according to drawing No. P76/89/R-5.

1.10 Where removable precast concrete slabs are provided to cover preformed trench after cable installation, each piece of concrete slab shall be provided with lifting eyes and shall not weigh above 80 kgf. The precast concrete slabs shall be numbered in a sequential order by painting numbers of 50 mm high in white colour on both surfaces of each precast concrete slab so as to facilitate reinstatement of precast concrete slabs after cables installed. A sketch in permanent manner showing the layout and numbering of precast concrete slabs shall be posted on the substation wall for reference. Where the slabs are along the route of transportation of substation equipment, the slabs shall be capable of withstanding an average loading of 20 kPa. Otherwise the slabs shall withstand 10 kPa. Certificate by a registered structural engineer shall be submitted.

1.11 Where G.I. gratings of heavy duty type are specified to cover cable trench or cable pit, the G.I. gratings shall be fabricated with load bars of not less than 25 mm x 3 mm in cross-section, in grid size of approximately 30 mm x 100 mm and in weight of not less than 20 kgf/m^2. The gratings shall withstand a uniformly distributed load of 4 kPa without any permanent deformation. It shall be ensured that the deflection across the span shall not exceed 4 mm when a test load of 16 kPa is uniformly applied. Details of load table and catalogue of the gratings shall be submitted by customer to HK Electric for record.

Notes for Drawing Nos. GCS/3/12, GCS/3/13 & GCS/3/14

1.12 The drain hole at substation floor or at cable chamber floor shall be connected to the building main drainage system for discharging lodged water at substation trench and the position is shown in substation layout drawing. The drain shall be equipped with a non-return valve as a flood gate to prevent the backward flow of drain water into the substation. Such non-return valve should be operated by gravity flow only but not for pressurized application. Details of non-return valve and layout plan of drainage system connecting to the drain hole at substation floor shall be submitted by customer to HK Electric for record.

A UPVC drain pipe of 75 mm diameter shall be provided with the drain hole for the discharge pipe of HK Electric portable pump. UPVC screw type cap shall be installed on the drain pipe to prevent odour/waste water overflow to the substation in case the flood gate fails. The drain hole shall be covered with a stainless steel lid of 3 mm thick, engraved "FLOOR DRAIN" about 8-mm letter high on external surface of the lid. The lid shall be fixed using 4 Nos. of 5-mm-diameter stainless steel screw with counter-sunk Philip screw head and air-tight gasket or O-ring. The lid and the fixing screws shall be flush with the finished floor surface.

1.13 SUBSTATION CEILING

Except for the dedicated staircase/passage within the area locked up by HK Electric for personnel access and equipment transportation only but outside HV switchgear and transformer compartments, the entire substation ceiling shall be of double reinforced concrete slab construction. The following requirements shall be met for all types of substations:

a. The clear separation between the upper slab and the lower slab shall not be less than 100 mm. The thickness of lower slab shall not be less than 125 mm.

b. All finished surfaces of lower slab shall be smooth, firm and free of voids, surface projections, loose materials, oil, grease and all foreign matter. No pipes, ducts, conduits nor services of any nature are to be embedded inside the lower slab.

c. No drain pipes shall be allowed to run inside the substation enclosure.

d. No timber left in formwork shall be allowed within the separation void.

e. The top surface of the lower slab shall be designed with gravity fall of 1:100 to avoid ponding of water. At least two drain holes with drain pipes of not less than 38 mm diameter shall be provided for the lower slab to discharge water to outside of the substation.

f. A side inspection panel of minimum size of 150 mm wide by 100 mm high shall be provided to inspect the void between the upper and lower slabs. The side inspection panel shall be easily accessible from public area and be fitted with stainless steel label engraved "SUBSTATION DOUBLE-SLAB CEILING INSPECTION PANEL 電力分站雙層天花板檢查面板". The characters shall be in minimum 10 mm high in black colour. The side inspection panel shall be fixed using stainless steel screws.

g. In case the lower slab is divided into multi-compartment by ceiling beams, each compartment shall have its own drain holes/drain pipes and side inspection panel.

h. A caution label of 300 mm by 200 mm shall be posted immediately adjacent to each entrance of substation stating "DOUBLE-SLAB CEILING! NO DRILLING WORK!" and the Chinese translation「雙層天花板！ 禁止鑽探！」. Same bilingual wording shall be stencil painted on the ceiling in red in character not less than 75 mm high at every 5 m interval.

i. Unless otherwise specified in this Drawing, the lower and upper slabs shall have waterproofing and water tightness conforming to the requirements regarding material and workmanship on "Roofing" as stipulated in the latest edition of General Specification for Building by ASD.

j. Drainage plan for lower and upper slabs, waterproofing details for lower and upper slabs and waterproofing details for drain points serving lower and upper slabs shall be submitted. Cementitious type waterproofing for double slab will not be accepted.

Waterproofing material for upper and lower slab shall be materials of proprietary sheet or liquid membrane type roofing system. Proprietary roofing system shall be laid by specialist contractors.

The asphalt/bituminous waterproof sheet membrane to ASTM standard, thickness not less than 3 mm and longitudinal elongation not less than 200% will be acceptable:

Other types of membrane, provided that technical details are submitted indicating equivalent waterproofing performance, will also be considered.

Before commencing work, the contractor shall demonstrate on site that all adhesives and materials are fully compatible and shall be certified by the suppliers/manufacturers in writing.

Notes for Drawing Nos. GCS/3/12, GCS/3/13 & GCS/3/14

k. Waterproofing material shall be wrapped onto the inner face of water outlet or any case-in drains and drain pipes.

l. A copy of design drawing clearly indicating the locations of the substation ceiling, drain holes, drain pipes, void area, vertical grating, side inspection panel etc. shall be submitted at early design stage.

m. An as-built drawing for substation ceiling shall be certified by an Authorised Person (Cap.123) and be submitted to HK Electric at the time of substation inspection. The as-built drawing shall clearly indicate the locations of the drain holes, drain pipes, side inspection panel. A copy of the drawing shall be laminated and posted on substation wall for quick reference on site.

n. To ensure the effectiveness of waterproofing system for the double slab, the following tests / inspections shall be carried out at the time of substation inspection and the details of results shall be certified by an Authorised Person and submitted to HK Electric:

   i. Flood test on lower slab with minimum 50-mm-depth water for at least 72 hours;

   ii. Visual inspection on soffit of lower slab after the flood test;

   iii. Flood test on upper slab with minimum 150-mm-depth water for at least 72 hours;

   iv. CCTV inspection for soffit of upper slab through the Side Inspection Panel after the flood test; A DVD/VCD showing the CCTV inspection through the side inspection panel after the flood test shall be submitted to HK Electric for reference and record; and

   v. The separation void shall be left clean and dry after the flood tests.

Notes for Drawing Nos. GCS/3/12, GCS/3/13 & GCS/3/14

2. CABLE ENTRY TO SUBSTATION

2.1 The architect is required to obtain information from utility companies and conduct site survey (including trial trenches excavation) regarding the details of underground services and roadside trees in the vicinity of substation. The architect is to ensure early in the design stage that the cable entry points to the substation will not be obstructed by other underground services or located within the no-excavation zone of any roadside tree according to Register of Old and Valuable Trees of LCSD and code of practice published by authorities of HKSAR Government. Details of underground services and any roadside trees near cable entries shall be indicated on the Ground Floor Plan submitted to HK Electric.

2.2 Normally the width of cable trench to be excavated for commissioning a new substation shall be taken as 1000 mm. The architect shall arrange excavation at the cable entry points within the site boundary for inspection by HK Electric engineer during hand-over of the substation. Where necessary the architect shall be responsible for clearing underground obstacles with other utility companies and any road side trees near cable entries before hand-over of substation.

2.3 Unless otherwise specified, all the cable entry point shall be at 1050 mm to 1300 mm below the pavement level outside the substation.

2.4 The cable entry of substation shall be properly sealed and watertight against ingress of water by the developer.

a. The last section of 4 m long (max) of 150-mm and 75-mm UPVC cable ducts will be provided by HK Electric. For cable ducts longer than 4m, the extra lengths of cable ducts are to be provided by the developer. Cable ducts of diameter other than 150 mm or 75 mm shall also be provided by developer.

b. The developer is required to collect UPVC ducts, duct spacers, sockets & end caps suitable for UPVC ducts or sleeves in nominal diameter of 150 mm and 75 mm provided and delivered to site by HK Electric. The developer is also required to install the cable ducts at site to ensure ducts or sleeves are constructed with correct spacing and level before concrete surroundings and application of sealings according to drawing No. P627/05/R-1.

c. All cable entry ducts or sleeves shall be capped by UPVC cap and sealed against water ingress or any noxious or explosive liquid or gas into the substation at the outside of substation before handing over the substation to HK Electric.

d. The developer shall be responsible for re-sealing the occupied ducts or sleeves using cementitious mortar with waterproofing additive and/or expansible polyurethane foam or other waterproofing material at the ends outside substation of the ducts or sleeves after installation of cables by HK Electric. The thickness of sealant shall not exceed 75 mm so as to facilitate future removal of sealant inside the ducts when cables are installed by HK Electric. Fibre-glass cotton can be inserted inside the ducts to separate the sealants where necessary.

2.5 Where the substation entrance is via back lane, the architect shall be responsible for aspects of flooding and illegal structure up to the point of public access which will obstruct the equipment transportation and cabling works by HK Electric. For preformed cable trench inside customer's premises leading to the substation, suitable drains should be included to prevent lodgement of water inside the preformed trench. The preformed cable trench and draw pits (if any) shall be fully filled up with nylon sandbags by the builder after HK Electric cables have been installed.

2.6 Ducts or sleeves other than substation cable entry duct shall be of G.I. or UPVC as specified. Where UPVC ducts or sleeves of nominal diameter 150 mm are specified, the material shall comply with BS 3506:1969, Class D and internal diameter shall be 146 mm +/-1 mm in order to suit the duct plugs used by HK Electric. Ducts of 200 mm diameter shall also comply with BS 3506:1969, Class D. If required, sockets shall be used to joint up duct lengths to ensure that the inside surface of ducts and sockets is smooth after being installed and assembled together.

3. SUBSTATION LIGHTING & POWER

3.1 The installation of substation lighting and power must comply with Electricity Ordinance, Electricity (Wiring) Regulations and HK Electric Supply Rules.

3.2 Unless otherwise specified and except those wirings passing from customer's switchroom to HK Electric substation, electrical wirings shall be enclosed in surface mounted G.I. conduit. Conductor size of wirings to be controlled by 5-A or 6-A MCB shall be of 1.5 mm^2 Cu and similarly 2.5 mm^2 Cu for 15-A or 16-A MCB; 6 mm^2 Cu for 30-A or 32-A MCB. Phase identification using L1, L2, L3 and N for 3-phase supply or L and N for 1-phase supply should be provided for all switches and final circuits. L1, L2, L3 label shall be attached to socket outlet and lighting switch to denote the supply phase.

3.3 The main MCB for substation lighting and power shall be of TP&N 4-pole construction. All MCB used shall have a breaking capacity of not less than 9 kA.

3.4 A 32-A TP&N 4-pole 3-position selection switch supplied by HK Electric for connection of supply to substation main MCB board shall be collected and installed by customer according to Drawing No. P561/01/R-10.

Notes for Drawing Nos. GCS/3/12, GCS/3/13 & GCS/3/14

3.5 Unless otherwise specified, fluorescent lamp on wall shall be at 2800 mm above substation floor level. For substation with headroom over 3600 mm, the lamps below ceiling shall be supported such that the lamps are at 3200 mm above ground. Lighting in substation shall be fed by at least two final circuits of different phases. The layout of lamps shall be arranged in such a way that adjacent lamps are fed by different final circuits. The number of fluorescent tubes fed by each final circuit shall be approximately equal and no more than 8 per circuit.

3.6 Normal type fluorescent lamp fitting shall be installed unless Impact Resistant Type Fluorescent Lamp Fitting is specified in the substation layout drawing. Impact Resistant Type Fluorescent Lamp Fitting will be marked "IR" next to the symbol in the drawing, and shall be installed in area of cable chamber, cable pit and cable shaft. The Impact Resistant Type Fluorescent Lamp Fitting shall comply with either (a) or (b) of the following requirements:

a. Diffuser of flame retardant material tested to withstand a mechanical shock of not less than 10 Joules to EN60598 and stainless steel toggles as diffuser clips shall be fitted onto the lamp fitting.

b. A wire guard in approximately mesh size of 25 mm x 75 mm made from stainless steel wire and not thinner than 3.25 mm diameter shall be fitted onto the lamp fitting or wall by stainless steel screws. The wire guard shall be of swing-down design and locked by wing-head nuts on both sides to facilitate replacement of fluorescent lamp.

3.7 Fluorescent lamp to be installed in HV cable pit shall be controlled by an independent switch via an independent MCB, impact resistant type and fixed as close to the top of R.C. slabs or beams as practicable.

3.8 Emergency lighting, if so required by FSD, shall be backed up according to FSD's requirements. Each emergency light shall be labelled "EMERGENCY LIGHT" and the Chinese translation 「緊急照明」. Future maintenance/replacement of such emergency lighting and the associated fitting shall be the responsibilities of customer.

3.9 Socket outlets in substation shall be of 13 A in ring circuits and be provided with L1, L2, L3 labels for phase identification in permanent manner. Socket outlets shall be installed at 800 mm above substation floor level unless otherwise specified. Socket outlets to be installed in HV cable pit shall be protected by an independent MCB, to IP65 standard and fixed as close to the top of R.C. slab or beam as practicable.

Notes for Drawing Nos. GCS/3/12, GCS/3/13 & GCS/3/14

3.10 Test on phase sequence, earth fault loop impedance, operating characteristics of residue current device and 500-V megger test on the substation lighting and power installation shall be carried out and be witnessed by HK Electric engineer at the time of substation hand-over. Customer shall submit a copy of Work Completion Certificate (Government Form WR1) duly signed by a registered electrical worker for lighting & power installation in substation before substation handing over.

3.11 i. For staircase, passage, etc. within the area to be locked up by HK Electric, where layout of fluorescent lamps is not specified by HK Electric, customer shall ensure that the lamps are installed so as to provide an illumination of not less than 150 lux measured at floor level.

ii. For staircase, passage, etc. outside the area to be locked up by HK Electric, but forming part of the route of escape for the substation, illumination must be provided according to FSD's requirements. Also the electricity supply to the lightings shall be from the essential board in the building.

3.12 Exposed metallic parts inside substation should be bonded to the substation earthing connection in the manner laid down in Electricity (Wiring) Regulations. Brass or stainless steel bolts, nuts and washers shall be used at the equipotential bonding of exposed metallic parts for long lasting purpose.

3.13 Before energization of substation by HK Electric, the temporary wirings for substation lighting and power shall be properly connected to the 5-pin male type socket of the 32-A TP&N. 4-pole 3-position selection switch via a female connector having corresponding rating and dimensions by customer for safety purpose.

4. CONDUITS IN SUBSTATION

4.1 Conduits, be they metallic or PVC, shall be supported and fixed to ceiling/side wall at an interval of not more than 1200 mm. The method of anchoring conduits must be by red-head or similar device. Anchoring by raw plug or wood plug will not be accepted. No painting of G.I. conduit is required.

4.2 Unless otherwise specified, conduits shall not traverse low voltage busbar route nor be running above HK Electric supply equipment marked on the substation drawing. All horizontal conduits of any purposes shall be installed at a level of 2200 mm above substation floor. Connection to cubicles/boxes mounted onto substation wall shall be by means of top entry vertical conduits dropped from the horizontal conduits. Where necessary to install conduits across substation door, the conduits shall be fitted above the door.

4.3 All electrical metallic conduits shall be continuous with good electrical joints at boxes and couplings etc.

Notes for Drawing Nos. GCS/3/12, GCS/3/13 & GCS/3/14

4.4 For the purpose of installation of HK Electric trunking and earthing tapes, the 400 mm space on wall above substation floor should be free from any installation or conduit unless otherwise specified in this requirement.

5 VENTILATION SYSTEM IN SUBSTATION

5.1 Hangers for air duct shall be of U-shape, 40 mm x 7 mm thick hot dip galvanized steel plate (or equivalent size) at interval of not more than 1200 mm. Hangers shall be provided on either side of air duct joint. The method of anchoring the hanger onto the ceiling/side wall must be by red-head or similar device. Anchoring by raw plug or wood plug will not be accepted. The air duct must be securely fixed to the hangers by means of hot dip galvanized steel or stainless steel bolts and nuts with washers.

5.2 The air duct shall be made of hot dip galvanized steel sheet of not less than 0.8 mm thick. No painting of the air duct is required. The headroom under the air duct shall be 2700 mm minimum, but not greater than 3200 mm. The air duct, fan and silencers shall not traverse low voltage busbar route nor be running above HK Electric supply equipment marked on the substation drawings.

5.3 Silencers, acoustic lining and/or acoustic plenum, etc. shall be installed to reduce noise level to be not exceeding the values as stipulated in Noise Control Ordinance (NCO). In case of axial flow fans being provided by customer, the following must be submitted early at planning stage:

a. Drawings to show the configuration of the ventilation system.

b. Drawings to show the locations of the existing or assumed nearest noise sensitive receivers (NSR) and the corresponding distances away from the substation and supply/exhaust louvres.

c. Detailed acoustic calculation of the ventilation system to verify compliance with the NCO, including tonality consideration, if any.

d. Description clearly indicating the approach and methodology on which the calculation is based.

e. A copy of the detailed references for the technical data adopted in the calculation, including catalogues of ventilation fans and silencers, attenuation figures, etc.

If the acoustic calculation is not conclusive due to any reasons, a post-commissioning noise measurement at the identified NSR with entire 1/3 octave frequency spectrum from 31.5 Hz to 16 kHz has to be carried out by the developer to ensure compliance with the NCO.

Notes for Drawing Nos. GCS/3/12, GCS/3/13 & GCS/3/14

5.4 The noise level measured at any location within the substation and at 2 m above finished floor level of substation shall not exceed 85 dB(A) while all the intake/exhaust fans for the substation are in operation.

5.5 The as-measured noise level of ventilation system must not exceed the values stipulated in Noise Control Ordinance.

5.6 Where two or more ventilation systems are installed, the ducting, fan, silencer, control panel and other major parts shall be numbered in a permanent manner at intervals not exceeding 3 metres.

5.7 Where intake fan system and exhaust fan system are installed, the ducting, fan, silencer, control panel and other major parts shall be labelled "INTAKE 入風" and "EXHAUST 出風" accordingly and direction of air flow shall be indicated by using arrows in a permanent manner. Inter-tripping control box shall be provided for the intake and exhaust fans. The customer must demonstrate by calculation and on-site measurement that the INTAKE and EXHAUST paths will not be short-circuited.

5.8 Unless otherwise specified by HK Electric, the air duct shall be so designed that the average air velocity at any cross-section shall not exceed 4.2 m/s.

5.9 For substations to be equipped with exhaust fan only, the average air velocity at exhaust louvres shall not exceed 3.0 m/s. Also the inclined angle at the gradual expansion of exhaust louvres shall not be more than 30°.

5.10 For substations to be equipped with intake/exhaust fans, the average air velocity at intake/exhaust louvres shall not exceed 3.0 m/s. Also the inclined angle at the gradual expansion of intake/exhaust louvres shall not be more than 30°.

5.11 For remote on/off control of substation ventilation system, customer is required to install fan control box(es) which will be supplied by HK Electric in the substation according to HK Electric drawing No. P382/98/R-2 before handing over the substation. A pair of dry contact (220 V, 5 A) shall be provided to HK Electric for controlling the ventilation fan if central control system is used by customer where control box provided by HK Electric is not applicable. Such details of electrical control system shall be submitted to HK Electric for approval at design stage.

5.12 Local emergency switch shall be provided at a level not exceeding 500 mm above the bottom of fan and within 1 metre from each ventilation fan. The switch may be installed on wall, ceiling or an independent steel framework, but shall be installed as close as possible to the ventilation fan junction box and must not be fixed onto the axial flow fan or silencers.

6. <u>VENTILATION LOUVRES ON SUBSTATION WALL</u>

6.1 Ventilation louvres shall be provided on substation walls as specified in HK Electric drawings. The constructional details are shown on drawing No. P638/06/R-1.

6.2 The ventilation louvres and frame shall be made of stainless steel sheet and thickness of 1.5 mm. A frame shall be provided for louvre leaves.

6.3 For substations at ground level, the bottom edge of lower louvres shall be at 300 mm above finished floor level unless otherwise specified.

6.4 For lower louvres at ground level substations, a wire mesh with frame and handle shall be provided at the inner side. The wire mesh shall be of 10 mm x 10 mm and be made from stainless steel wire and not thinner than 2.0 mm diameter. The frame and handle of wire mesh shall be of rigid construction and be stainless steel. The frame and handle of wire mesh shall be so designed and constructed for slot-in installation and removal. Where necessary, two or more pieces of wire meshes shall be provided for large size louvre to facilitate removal and installation work. The overall weight of each wire mesh shall not exceed 25 kgf. Installation of wire mesh shall be by means of a vertical sliding-down or horizontal sliding-in action and that no bolts, nuts nor tools shall be required for fixing. It shall be ensured that the gap between frames of louvres and wire mesh after installation shall not exceed 10 mm. For easy cleaning of wire mesh, the earthing wire shall be fixed using a wing-head nut.

7. SUBSTATION DOOR

7.1 Ventilation louvres shall be provided on substation doors as specified in HK Electric drawings.

7.2 For lower louvres of ground floor substation, a wire mesh with frame and handle shall be provided at the inner side. The wire mesh shall be of 10 mm x 10 mm and be made from stainless steel wire and not thinner than 2.0 mm diameter. The frame and handle of wire mesh shall also be stainless steel and they shall be so designed and constructed for slot-in installation and removal. Installation of wire mesh shall be by means of: (a) a horizontal sliding-in action from the free edge of door leaf and then securing using a bolt; or (b) a vertical sliding-down action and that no bolts, nuts nor tools shall be required for fixing. It shall be ensured that the gap between frames of louvres and wire mesh after installation shall not exceed 10 mm. For easy cleaning of wire mesh, the earthing wire shall be fixed using a wing-head nut.

7.3 Substation door with its path of swing within passage of vehicular traffic or within area of car park space will not be accepted.

8. FIRE SERVICES INSTALLATION IN SUBSTATION

8.1 The architect shall be responsible for ensuring that the substation complies with the latest requirements set out by FSD. Unless fixed firefighting installation is definitely required by FSD, there is no need to install fixed firefighting equipment in HK Electric substation because non oil-filled high voltage switchgear and transformer(s) will be installed in the substation.

Notes for Drawing Nos. GCS/3/12, GCS/3/13 & GCS/3/14

8.2 Unless otherwise specified in this drawing, the installation shall comply with the latest edition of "Code of Practice for Minimum Fire Service Installations and Equipment" published by FSD. Letters or certificates certifying the compliance with the COP and the proper functioning of the fixed firefighting system (if any) shall be submitted prior to formal hand-over of substation.

8.3 Please note that HK Electric will install totally oil-less transformer(s) and switchgear in new substations. FSD has already granted exemption to HK Electric in the provision of portable fire extinguishers at this type of substations. Therefore, the developer is required not to include portable fire extinguishers in the substation during the building plan submission stage. During take-over of substation by HK Electric, no portable fire extinguisher shall be placed inside the substation.

8.4 Should fixed fighting system be required for the substation, an automatic/manual (A/M) change-over panel should be installed and the following arrangements shall be adopted.

a. A key box of stainless steel and thickness not less than 1.5 mm shall be provided immediate adjacent to the A/M change-over panel. The key box shall be not less than 100 mm high x 150 mm wide x 100 mm deep with a hinged front cover. A lock hole of 14 mm diameter shall be provided for HK Electric pad lock to lock the key box. On the front cover of key box, an engraved label stating "KEY BOX FOR FIRE SERVICES PANEL" and Chinese translation 「消防控制台匙箱」 shall be provided.

b. The key for A/M change-over panel shall be attached to a stainless steel chain secured at the inside of key box. The chain must be of sufficient length to enable A/M change-over operation and chain must not break when a 500-N tensile force is applied.

c. Another spare key for A/M change-over panel shall be handed to HK Electric engineer during substation inspection for keeping in HK Electric operations room.

8.5 Fixed firefighting piping (if any) shall be supported and fixed to ceiling/side wall at an interval of not more than 1200 mm. Such piping shall not traverse low voltage busbar route nor be running above HK Electric supply equipment marked on the substation drawings. The method of anchoring fixed firefighting piping (if any) must be by red-head or similar device. Anchoring by raw plug or wood plug will not be accepted.

8.6 Automatic fixed firefighting installation using water within the locked area of substation is not allowed. Fixed firefighting installation (if any) should be submitted to HK Electric for approval before handing over the substation to HK Electric.

8.7 Fire detection system, if required in the latest edition of "Code of Practice for Minimum Fire Service Installations and Equipment" published by FSD, shall be installed in substation. Detection heads of heat detecting type may be installed if deem necessary.

8.8 Where fire dampers are required by FSD, the fire dampers shall be installed onto the external side of opening such that checking and maintenance of the fire dampers could be carried out without entering the substation. To avoid overloading of ventilation fan system, proper electrical cut-off of ventilation fan should be provided.

9. MISCELLANEOUS

9.1 No drain, water sewer pipes or other services are to pass through or enter substation and the exclusive access(es) to the substation or to run inside the substation enclosing.

9.2 Heavy duty type telephone socket outlets supplied by HK Electric shall be collected and fixed to substation wall at 1300 mm above substation floor level as specified in substation layout drawings. The fixing details are shown on drawing No. P431/99/R-1.

9.3 The appliance/gear and the associated I-beam or other equipment for lifting of equipment shall be with a safe working load specified by HK Electric in the substation drawing and tested with a safety factor of 2. Certificate proving such shall be submitted prior to the acceptance of the substation. The lifting appliance/gear after the initial test shall also be tested periodically in accordance with the current Factories and Industrial Undertakings (Lifting Appliances and Lifting Gear) Regulations by customers. Certified copies of such certificates of periodical test shall also be submitted to HK Electric for record.

9.4 Transit block shall be installed at a height measured above substation floor level as specified in the substation drawing.

9.5 Wall opening for emergency wirings shall be provided as indicated on drawing No. P638/06/R-1 .

9.6 All labels shall be engraved and be in both English and Chinese. White characters on red background shall be used for warning labels. Black characters on white background shall be used for indicative labels.

9.7 To inform personnel entering the substation of the route of escape from substation to open space, for:

i. all substations not situated at ground level; and

ii. ground level substations where there is change in direction in the route of escape or the measured distance along the route of escape from substation door to open area exceeds 20 metres.

A plan showing the route of escape should be affixed onto the wall near the substation door. Also illuminated exit signs and directional signs at turning corners shall be provided outside substation. All the illuminated signs shall conform to FSD's requirements. Unless it is definitely required by FSD, illuminated exit signs shall not be installed inside substation area locked up by HK Electric. The future maintenance of the route of escape plan, exit sign and directional sign shall be the responsibility of the customer.

9.8 No fluorescent lamp fitting, heat detector, axial flow fan, flexible conduit for fan and emergency push button for fan shall be installed within the high level hazard zone as specified in drawing No. P346/97 unless they are at less than 2300 mm high measured from substation floor.

9.9 For safety purpose,

a. Black/yellow strips in 50 mm high shall be painted at conspicuous positions, such as beams, slabs, removable supporting steels, etc. at top of the HV cable pit with luminous paint. The same shall be applied to locations of sudden change in level.

b. No protruded objects which may cause injury are allowed along the passage up and down the HV cable pit.

c. Sharp edges at the heavy duty grating and the cat ladder shall be eliminated.

9.10 An earthing bracket bonded to the building main earthing shall be provided at the cable entry of substation according to Drawing No. P574/02/R-1.

9.11 All the MCB boards, cubicles "BattLV", TMC cubicle, fan control box(es) and 32-A selector switch shall be mounted on substation wall by using Unistrut channels at the back.

9.12 The developer shall prepare the necessary Temporary Traffic Measures (TTM) proposal and obtain the approval from Transport Department (TD) and Traffic Police for HK Electric equipment transportation to the substation if the substation door is opened to carriageway designated as "Restriction Zone – Clearways" by TD or there are other site constraints that application of TTM from the Government Authorities is necessary.

Notes for Drawing Nos. GCS/3/12, GCS/3/13 & GCS/3/14

9.13 The developer shall arrange to revise the hoarding of the construction site at their own costs to provide sufficient space for HK Electric to excavate the cable trench outside the construction site for provision of supply if the hoarding or its foundations are found to be obstructing HK Electric trenching and cabling work.

9.14 Stainless steel shall mean stainless steel of grade 316 unless otherwise specified.

9.15 The customers in the development shall ensure that the substation equipment transportation route within the customer's premises is properly maintained and cleared from obstruction at all times. The facilities (including lifting appliances, lifting gear, freight lifts, etc.) provided by the developer for the purpose of transportation of equipment shall be properly maintained by the customers in the building at their own costs to satisfy the legal requirements.

Notes for Drawing No. GCS/3/14

1. Level of G/F is assumed at + 0.0, levels of working platforms are with reference to the high level of G/F.

2. Direct vehicular access shall be available to the front of substation door at a horizontal distance not exceeding 4 metres. Direct vehicular access shall mean accessibility of a standard 30 ton fire appliance of FSD of HKSAR Government.

3. The substation floor level must not be of 7 metres higher than the pavement level measured at centre line of substation door.

4. The gradient of access road to substation (when measured along +/-10 m horizontally from centre line of door 'A') must not be greater than 1:12.

5. There shall not be any protruded objects obstructing transportation of equipment to / from substation when measured along +/-6 m horizontally from the centre line of door 'A' and vertically from 3m of top of door 'A' down to pavement level.

6. The separation of the two cable entry points shall be not less than 3500 mm.

7. The developer/landlord shall provide haulage lug(s) inside the cable riser duct as and required by HK Electric for cable laying woks. The statutory loading tests of the haulage lug(s), when required, shall be arranged by the developer / landlord. These haulage lug(s) shall be of removable type such that it (they) could be removed after completion of cable laying.

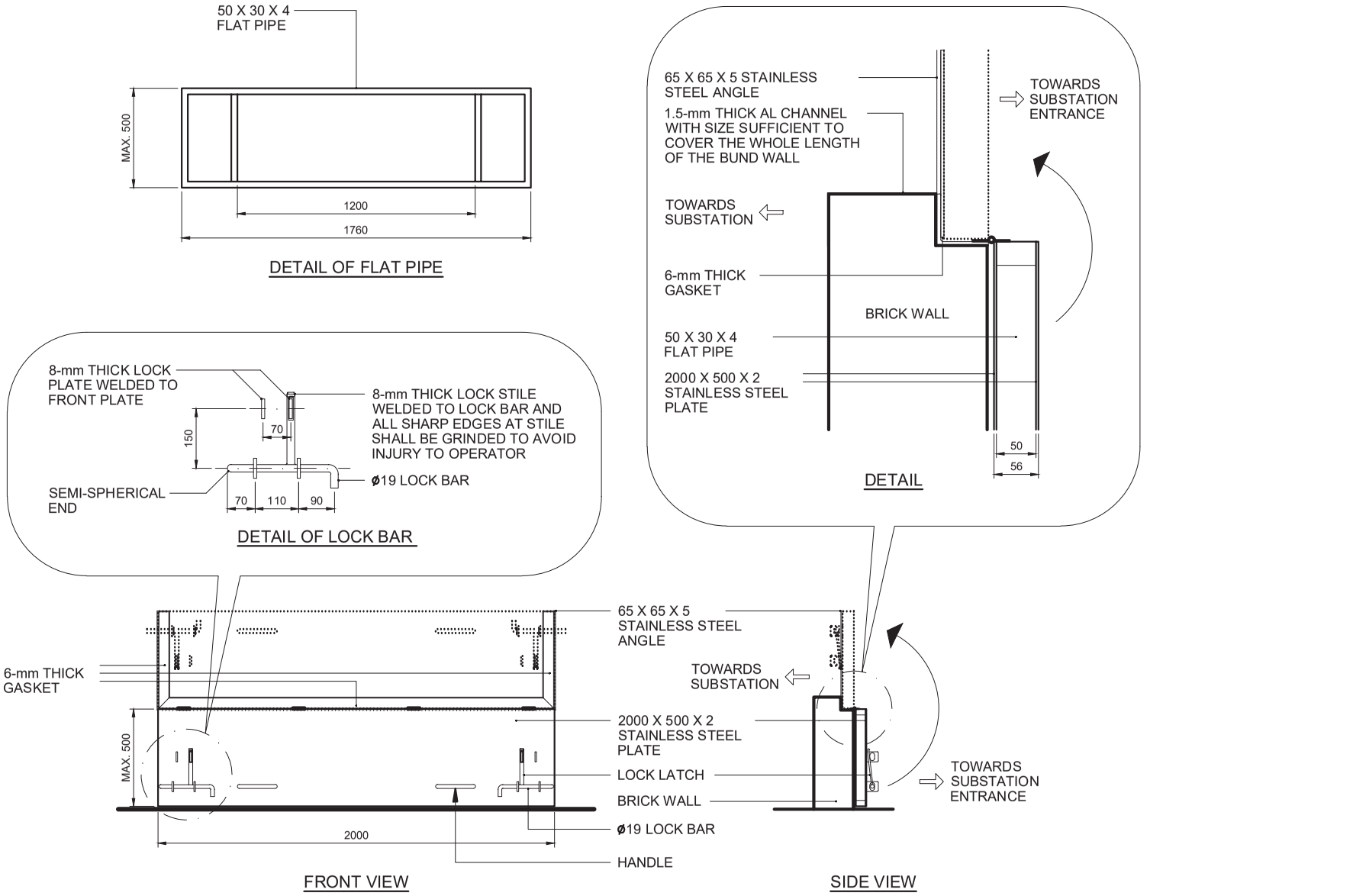

NOTE : ALL DIMENSIONS ARE IN mm.

Drg. No. GCS/3/15

BUND WALL AND FLOOD GATE FOR DISTRIBUTION SUBSTATION (P806/19) SHEET 1 OF 2

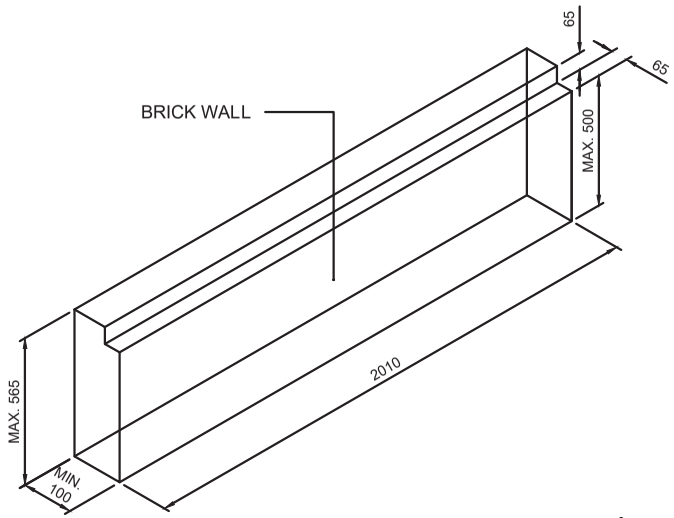

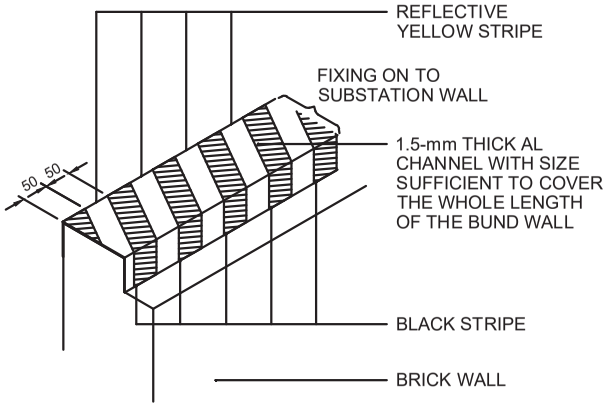

TYPICAL LAYOUT OF BUND WALL

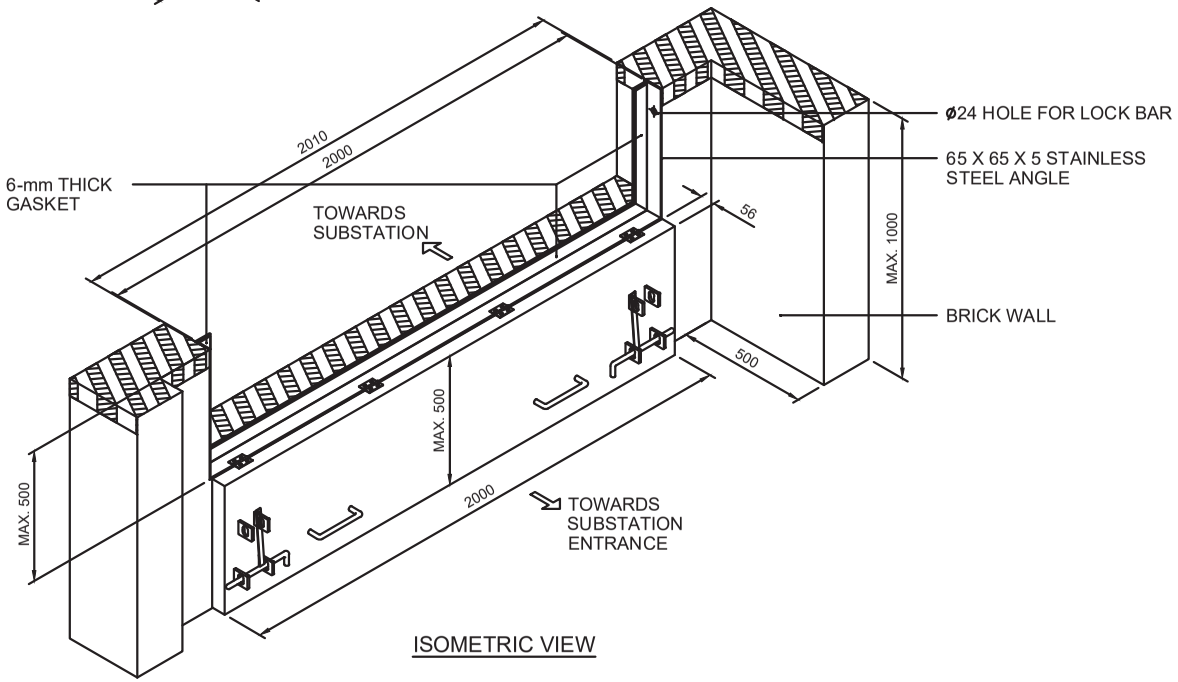

ISOMETRIC VIEW

NOTE : ALL DIMENSIONS ARE IN mm.

Drg. No. GCS/3/15

BUND WALL AND FLOOD GATE FOR DISTRIBUTION SUBSTATION

(P806/19) SHEET 2 OF 2

Notes for Drawing No. GCS/3/15

1. P.D. = Principal Datum

2. Brick bund wall and flood gate shall be constructed and installed by the builder after equipment has been delivered to the substation as specified in the substation layout drawing.

3. For the bund wall and flood gate to be constructed/installed directly across the substation door opening, the maximum height of each is 500 mm. The builder should refer to the substation layout drawing regarding the heights of the bund wall and flood gate to be constructed and installed. The maximum height of bund wall outside the substation door opening is 1000 mm.

4. The top level of the bund wall or flood gate directly across the substation door opening, whichever is the highest, should be at + 6.0 m P.D. (or as specified in the substation layout drawing). If the top level of the bund wall after constructed is ≥ 6.0 m P.D. (or as specified in the substation layout drawing), no installation of flood gate is required.

5. The bund wall shall comply with the following requirements:

   a. The bund wall shall be made of red bricks.

   b. Typically, the bund wall shall be with overall thickness of not less than 100 mm.

   c. Water-proofing cement sand plasters with thickness not less than 10 mm shall be applied to all surfaces of the bund wall. The surface finish of the cement sand plaster shall be smooth and free from cracks and voids.

   d. Two layers of water-proof paint in white colour shall be applied to the bund wall after the cement sand plasters are completely dried.

   e. After completion of the application of water-proofing material, an additional aluminium cover, which should be made of 1.5-mm thick aluminium channel with size sufficient to cover the whole length of the bund wall is required to be installed on top of the bund wall. Black/reflective yellow stripes shall be painted on the cover.

   f. All gaps between bund wall and the substation structures shall be properly sealed with sealants.

Notes for Drawing No. GCS/3/15

6. The flood gate shall comply with the following requirements:

    a. The flood gate shall be made of stainless steel grade 316.

    b. The stainless steel gate shall be made of 2-mm thick front sheet including double-angle (65 x 65 x 5 mm) angle frame.

    c. EPDM water-proof seals (6-mm thick gasket) shall be installed between double angle frame and the stainless steel gate to prevent water leakage into the substation.

    d. Custom-made locking device with 250 mm in length shall be installed at both ends of the gate.

    e. Two handles of ∅ 8 shall be installed at each side of the gate at a separation of not more than 400 mm from the edge of panel.

    f. At least four bullet hinges shall be installed along the stainless steel gate.

    g. Water-proof cement sand grouting and water-proof sealant shall be applied to all gaps and joints around the gate.

    h. The weight of the flood gate should not exceed 20 kgf.

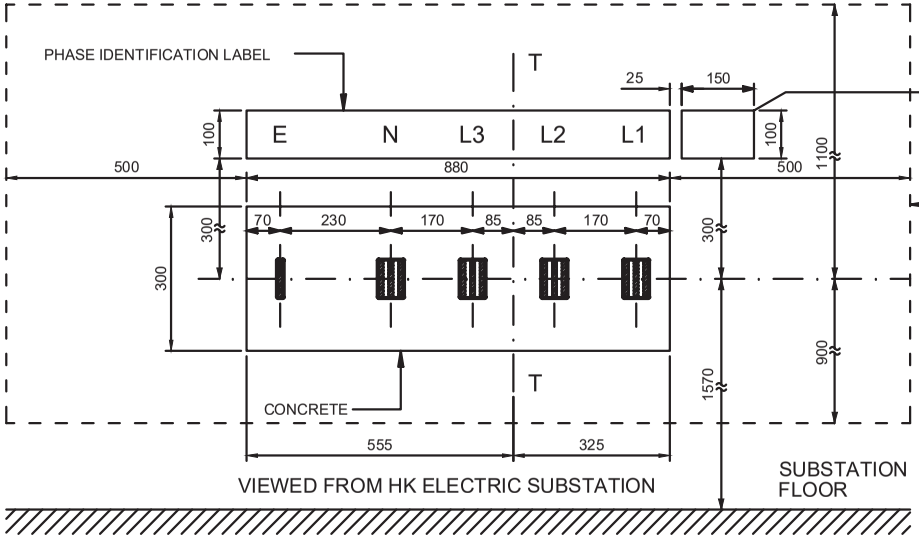

LABEL STATING " TRANSIT BLOCK No.____" WHERE NECESSARY

WALL SURFACE TO BE CLEAR OF ANY CONDUITS, SOCKET OUTLETS, ETC. FOR INSTALLATION OF SWITCH BOARD BY HK ELECTRIC. FOR SUBSTATION WITH MORE THAN ONE TRANSIT BLOCK, THE CENTRE-TO-CENTRE SEPARATION BETWEEN ADJACENT TRANSIT BLOCKS SHALL BE 1600 mm MINIMUM

* REFERENCE LINE T - T OF TRANSIT BLOCK TO BE REFERRED WHEN THE HORIZONTAL SEPARATION TO EDGE OF TRENCH FOR HK ELECTRIC L.V. FUSEBOARD IS SPECIFIED IN SUBSTATION LAYOUT DRAWING

SECTION B - B

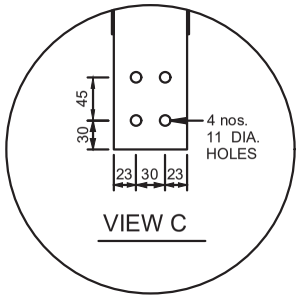

VIEW C

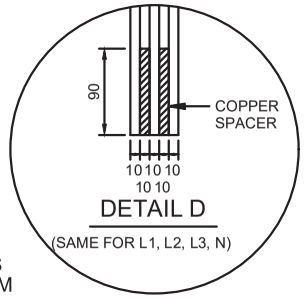

DETAIL D

(SAME FOR L1, L2, L3, N)

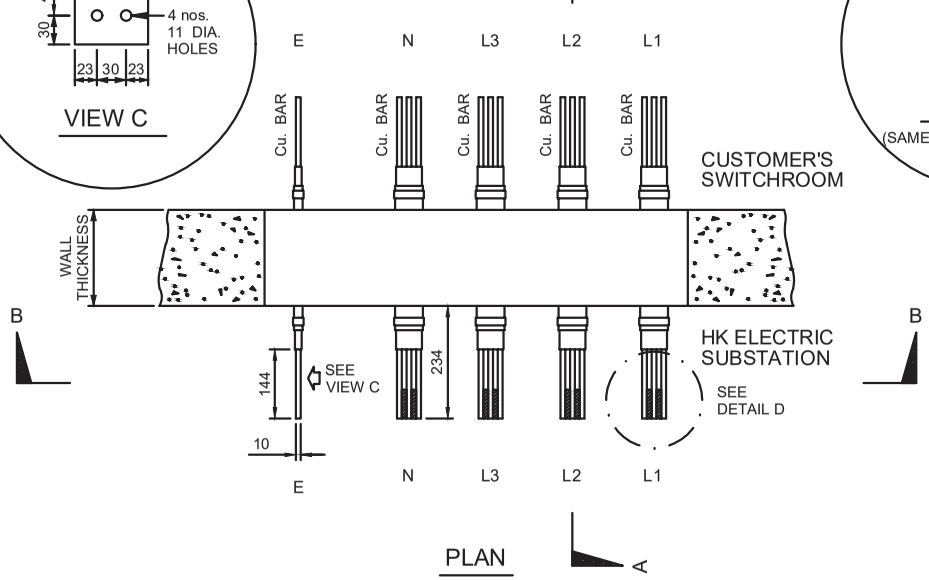

PLAN

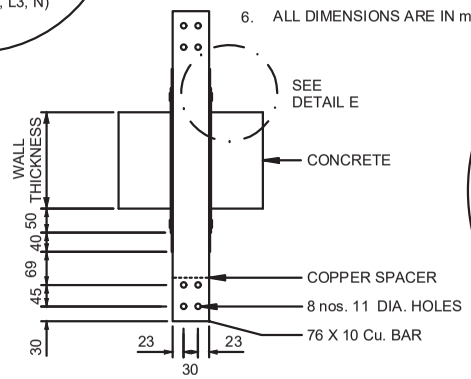

SECTION A - A

(SAME FOR L1, L2, L3, N, E)

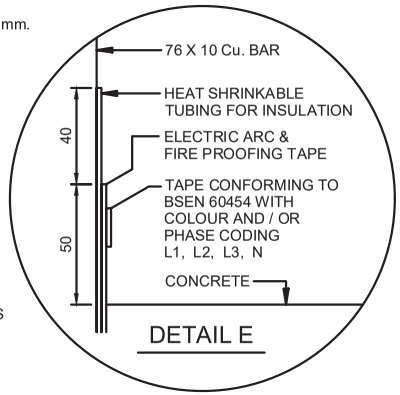

DETAIL E

NOTES :

1. THIS TRANSIT BLOCK IS FOR CUSTOMER MAIN SWITCH OF RATING NOT EXCEEDING 2500 A
2. INSULATION LEVEL OF TRANSIT BLOCK SHALL BE 3 kV RMS FOR 1 MINUTE
3. ALL COPPER BARS SHALL BE TINNED AND HARD DRAWN OF HIGH CONDUCTIVITY ACCORDING TO CW004A OF BSEN 13601 OR C11000 OF ASTM B187M OR EQUIVALENT
4.

CODE		COLOUR TAPE
L1	PHASE	COLOUR TAPES AS PER REQUIRMENTS IN ELECTRICITY (WIRING) REGULATIONS
L2	PHASE	
L3	PHASE	
N	NEUTRAL	
E	EARTH	GREEN / YELLOW

5. THE FOLLOWING ENGRAVED LABELS OF INSULATED MATERIAL AND FIXED USING M6 CONCRETE ANCHORS AND M6 G.I. HEX BOLTS SHALL BE PROVIDED ON BOTH SIDES OF WALL. THE LETTERS SHALL BE IN BLACK ON WHITE BACKGROUND. THE BOTTOM EDGE OF LABEL SHALL BE AT 300 mm ABOVE THE CENTRE LINE OF TRANSIT BLOCK.

   5A. LABEL OF 880 mm WIDE BY 100 mm HIGH MARKED WITH L1, L2, L3, N, E OR E, N, L3, L2, L1 (AS APPROPRIATE) WITH LETTER HEIGHT NOT LESS THAN 50 mm.

   5B. WHERE MORE THAN ONE TRANSIT BLOCK ARE INSTALLED IN A SUBSTATION, LABEL INDICATING TRANSIT BLOCK NUMBERING (AS SHOWN IN SUBSTATION LAYOUT DRAWING) WITH LETTER HEIGHT NOT LESS THAN 15 mm.

6. ALL DIMENSIONS ARE IN mm.

Drg. No. GCS/3/16

DETAILS OF LV TRANSIT BLOCK AT MID LEVEL (P314/96/R-3)

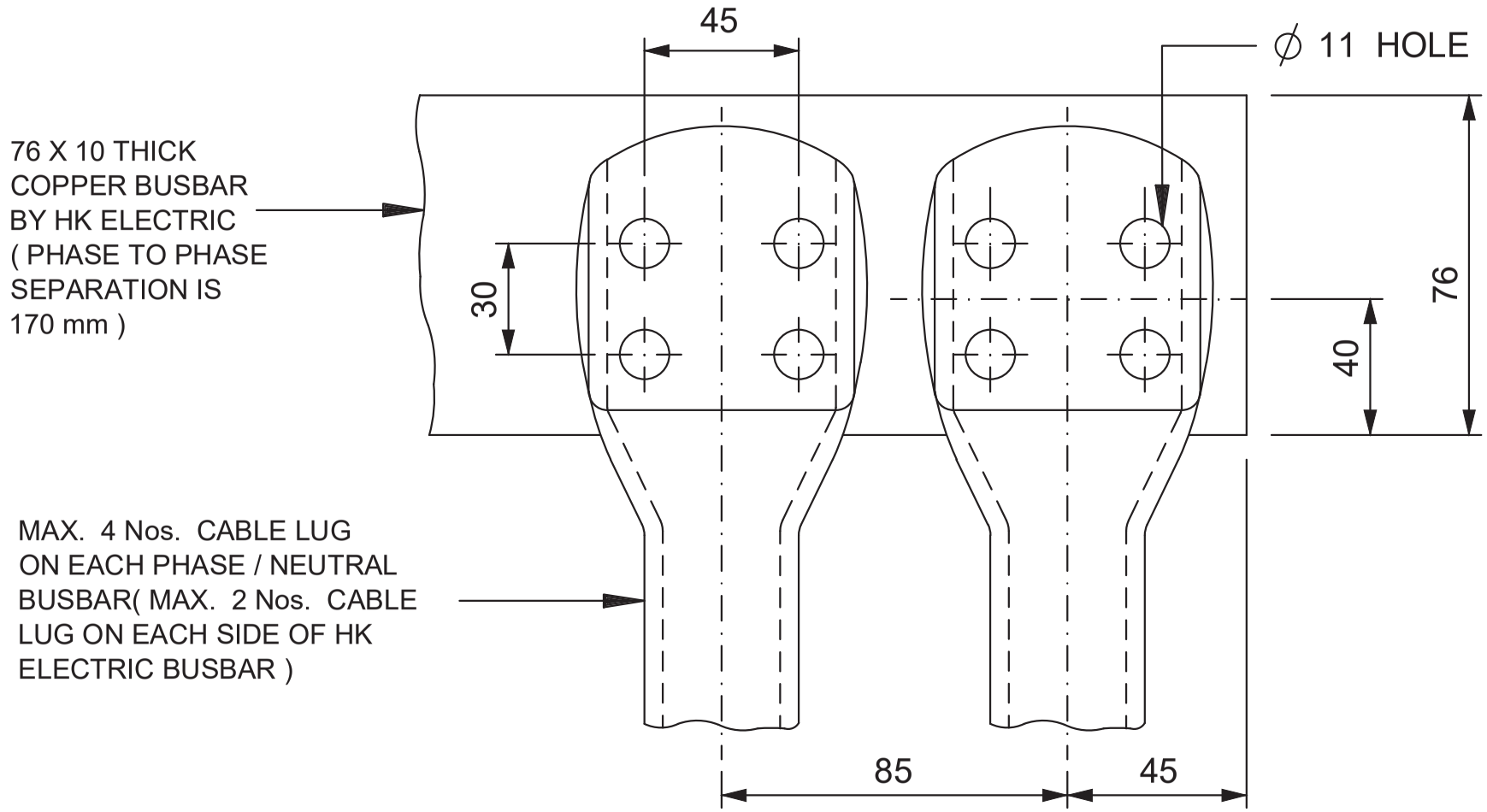

GENERAL LAYOUT FOR EACH PHASE/NEUTRAL

NOTE : ALL DIMENSIONS ARE IN mm.

Drg. No. GCS/3/17

ARRANGEMENT FOR SINGLE-CORE CABLES CONNECTED TO HK ELECTRIC SUBSTATION
(CUSTOMER MAIN SWITCH NOT EXCEEDING 2250 A) (P31/88/R-6)

Notes for Drawing No. GCS/3/17

1. The single-core cables and accessories shall be supplied and installed by customer. The cables shall be non-metallic sheathed with an installed rating of not less than the rating of the main switch to which they are to be connected.

2. A maximum of four (4) cables per phase/neutral may be used. The neutral conductor shall be of same installed rating as the phase conductor unless otherwise agreed by HK Electric.

3. The route length of the single-core cables must not exceed twenty (20) metres. Customer is required to ensure that the routing complies fully with current FSD's regulations.

4. The installation shall comply with the HK Electric Supply Rules, the latest edition of Code of Practice for the Electricity (Wiring) Regulations and other relevant Government Ordinances and Regulations.

5. Customer shall be responsible for providing and installing cable support facilities for his single-core cables inside HK Electric substation. Full details of the proposed method of installation must be submitted for HK Electric reference prior to installation work.

6. Customer shall be responsible for designing and installing single-core cables in order to minimize the electromagnetic interference generated from single-core cables. The physical layout of single-core cables must be submitted for HK Electric consideration prior to installation work.

7. For the purpose of compliance with Code 11 and 12 in the latest edition of Code of Practice for the Electricity (Wiring) Regulations, the customer shall use a single-core cable to be terminated in a lug with centre hole of diameter 11 mm for bonding his main earthing terminal to HK Electric bonding terminal that connects to the earthed point of transformer. Customer's bonding conductor shall not be less than 150 mm^2 copper equivalent.

8. Each single-core cable for phase/neutral connection shall be terminated in a lug as indicated in this drawing for connection to HK Electric equipment. The necessary bolts, nuts, washer, spring washer and penetrox grease (if necessary) shall be supplied by customer.

Notes for Drawing No. GCS/3/17

9. Durable and legible vinyl phase identification labels (such as cable ties, PVC sleeves, PVC ferrule tubes etc.) marked in L1, L2, L3 and N with character size not less than 25 mm shall be provided at the cable ends terminated to HK Electric substation. PVC insulation tape of width not less than 25 mm conforming to BSEN 60454 with phase coding L1, L2, L3 and N could also be used.

10. Termination work of the cable lugs onto HK Electric equipment shall be done by customer's registered electrical worker and under the supervision of HK Electric engineer.

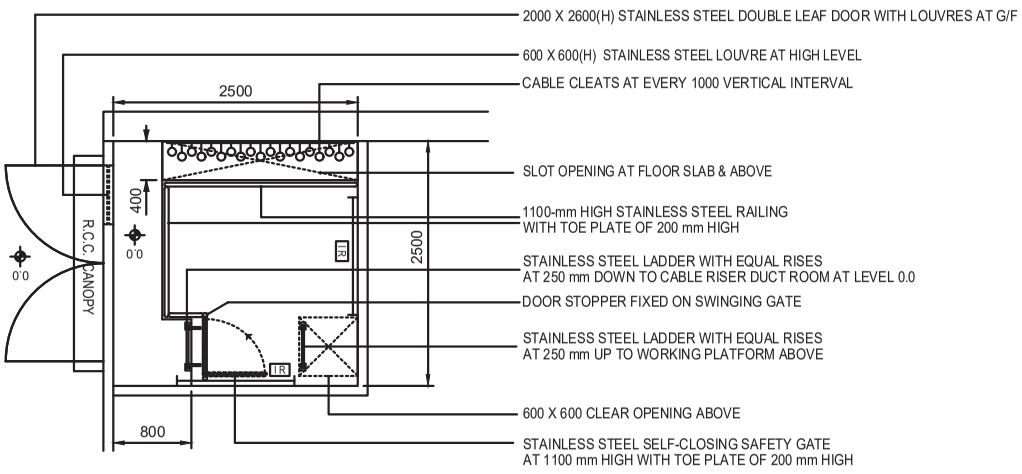

PLAN OF TYPICAL WORKING PLATFORM

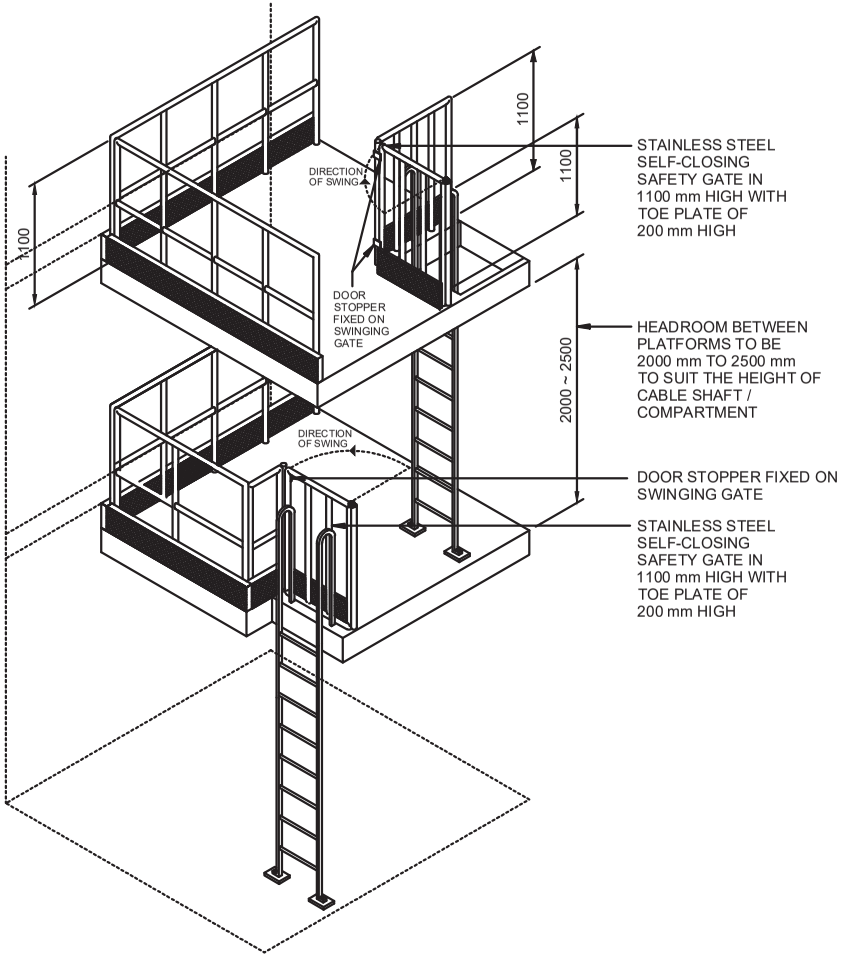

TYPICAL WORKING PLATFORMS

NOTES :

1. CABLE SHAFT/CABLE COMPARTMENT SHALL BE NOT LESS THAN 2.5 m(L) X 2.5 m(W)
2. AROUND ALL OPEN SIDES OF THE WORKING PLATFORM (UNLESS OTHERWISE SPECIFIED) SHALL BE INSTALLED WITH FIXED PROTECTIVE BARRIERS IN 1100 mm HIGH & TOE PLATES OF 200 mm HIGH. SHARP EDGES OF FIXING RAILS SHALL BE FITTED WITH PROTECTIVE END CAPS TO GUARD AGAINST PERSONAL INJURY.
3. THE VERTICAL LADDERS SHALL NOT BE FIXED SOLELY BY THEIR OWN WEIGHT.
4. THE FLOOR OF WORKING PLATFORM AND RUGS OF LADDER SHALL BE SLIP RESISTANT.
5. THE SELF-CLOSING SAFETY GATE SHALL BE UNDER A SLOW CLOSING OPERATION AND SHALL BE DESIGNED TO SWING ONLY INTO THE ACCESS HOLE. NO HOLD-OPEN OR HOLD-CLOSE DEVICES SHALL BE FITTED.
6. LIGHTINGS AND 13-A SOCKET OUTLETS IN THE CABLE SHAFT / COMPARTMENT SHALL BE PROVIDED. DETAILS WILL BE SPECIFIED IN THE SUBSTATION LAYOUT DRAWING.
7. AN EARTHING TAPE OR EQUIVALENT SHOULD BE PROVIDED AND INSTALLED BY THE DEVELOPER FROM THE EARTHING TERMINAL OF THE SUBSTATION DOWN TO THE BOTTOM OF THE CABLE SHAFT FOR BONDING ALL THE METAL PARTS INSIDE THE CABLE SHAFT.
8. PLEASE REFER TO SUBSTATION DRAWING FOR THE NUMBER OF CABLE CLEATS TO BE INSTALLED IN THE CABLE SHAFT.
9. TWO CABLE SHAFTS/COMPARTMENTS OR ONE CABLE SHAFT/COMPARTMENT WITH TWO CABLE ENTRY POINTS OF MINIMUM 3500 mm APART SHOULD BE PROVIDED.
10. FOR INSTALLATION OF CABLE CLEATS , PLEASE REFER TO DRAWING No. P671/08/R-3. THE DEVELOPER SHOULD BE RESPONSIBLE FOR TEMPORARY REMOVAL OF THE CABLE CLEATS FOR HK ELECTRIC CABLE INSTALLATION FOR SUBSTATION COMMISSIONING AND RE-INSTALLING THE CABLE CLEATS AFTER HK ELECTRIC CABLE LAYING , IF SO REQUIRED BY HK ELECTRIC DURING THE COURSE OF THEIR CABLING WORK.
11. UNLESS OTHERWISE SPECIFIED , THE CODE OF PRACTICE FOR DESIGN OF PLATFORMS , ETC. IN BS 5395 : PART 3 SHALL BE FOLLOWED.
12. ENGRAVED WARNING LABELS WITH EACH CHARACTER OR LETTER NOT LESS THAN 15 mm HIGH IN WHITE ON RED BACKGROUND SHALL BE FIXED TO EACH VERTICAL LADDER AND WORKING PLATFORM.

* THE RUNGS OF LADDER IS DESIGNED WITH A CONCENTRATED LOAD OF 1.5 KN TO BS5395 : PART 3. FOR SAFETY PURPOSE , ONE PERSON ON EACH VERTICAL LADDER AT A TIME.
按 BS5395 : PART 3 設計，梯級可承受1.5 KN 的集中負載。爲安全起見，豎梯每次只限一人使用。

** THE WORKING PLATFORM IS DESIGNED WITH UNIFORMLY DISTRIBUTED LOAD IN 5 KPa AND A CONCENTRATED LOAD OF 1.0 KN TO BS5395 : PART 3 FOR GENERAL DUTY USE. FOR SAFETY PURPOSE , A MAXIMUM OF 4 PERSONS AT A TIME ON EACH WORKING PLATFORM.
按 BS5395 : PART 3 設計，工作台供一般用途而其平均承載量爲5 KPa 及可承受1.0 KN 的集中負載。爲安全起見，每一工作台每次最多容納四人。

13. BEFORE HANDING OVER THE FIRST LEVEL SUBSTATION , THE ARCHITECT MUST SUBMIT A CERTIFICATE INDICATING THAT THE WORKING PLATFORM TOGETHER WITH THE LADDERS IS DESIGNED AND CONSTRUCTED TO REQUIREMENTS AS MENTIONED IN ABOVE NOTE Nos. 11-12 FOR HK ELECTRIC RECORD.

NOTE :

HDGS = HOT DIP GALVANISED STEEL
ALL DIMENSIONS ARE IN mm.

Drg. No. GCS/3/18
TYPICAL DESIGN OF WORKING PLATFORM AT CABLE SHAFT/CABLE COMPARTMENT FOR FIRST LEVEL SUBSTATION (P605/04/R-4)

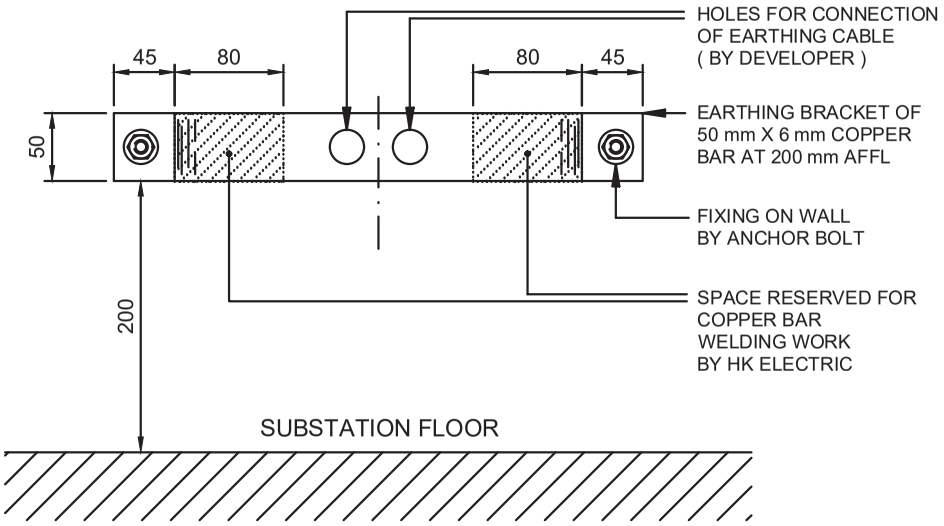

ELEVATION

AFFL = ABOVE FINISHED FLOOR LEVEL

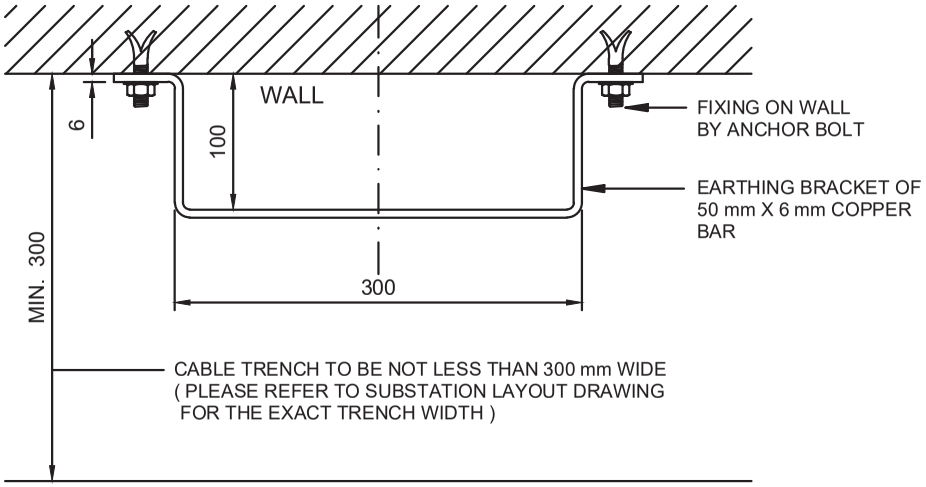

PLAN

REQUIREMENT :

1. THE BUILDING MAIN EARTHING SHALL BE BONDED TO THE FOUNDATION OF BUILDING AND EARTHING PIT WITH EARTHING RODS. THE MEASURED EARTH LOOP RESISTANCE SHALL NOT EXCEED 0.5 OHM.

2. THE EARTHING SYSTEM SHALL BE DESIGNED AND CONSTRUCTED TO BS 7430 OR EQUIVALENT , UNLESS OTHERWISE SPECIFIED IN CODE OF PRACTICE FOR THE ELECTRICITY (WIRING) REGULATIONS.

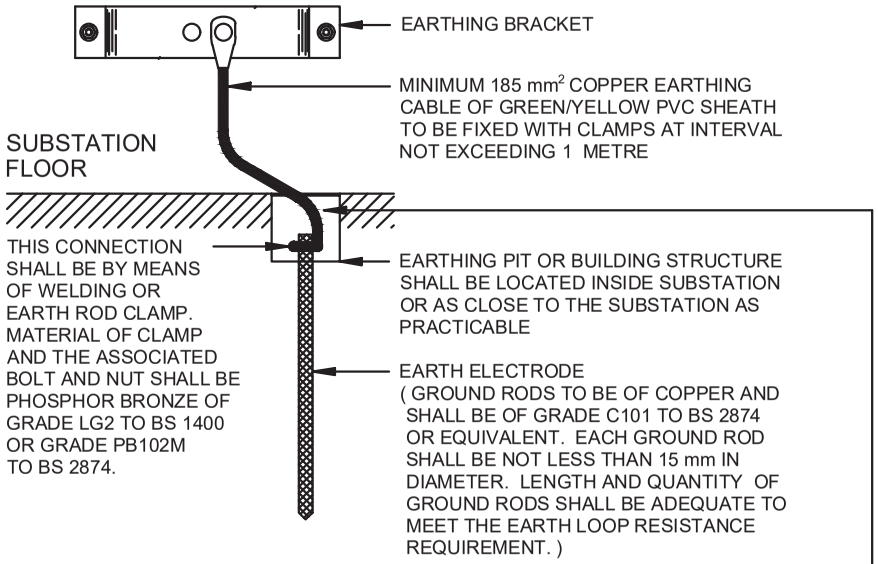

ENGRAVED STAINLESS STEEL OR PLASTIC ENGRAVED LABEL FOR WARNING NOTICE BEARING THE WORDS ' SAFETY EARTH CONNECTION — DO NOT REMOVE ' AND

' 安全接地終端 – 切勿移去 '

IN ACCORDANCE WITH CODE OF PRACTICE FOR THE ELECTRICITY (WIRING) REGULATIONS

NOTE :

1. TYPICALLY , THE EARTHING BRACKET WILL BE DESIGNED TO BE AT THE SUBSTATION CABLE ENTRY OF TRANSFORMER COMPARTMENT. PLEASE REFER TO SUBSTATION LAYOUT DRAWING FOR THE EXACT POSITION.

2. ALL DIMENSIONS ARE IN mm.

Drg. No. GCS/3/19

EARTHING BRACKET FOR NEW SUBSTATION (P574/02/R-2)

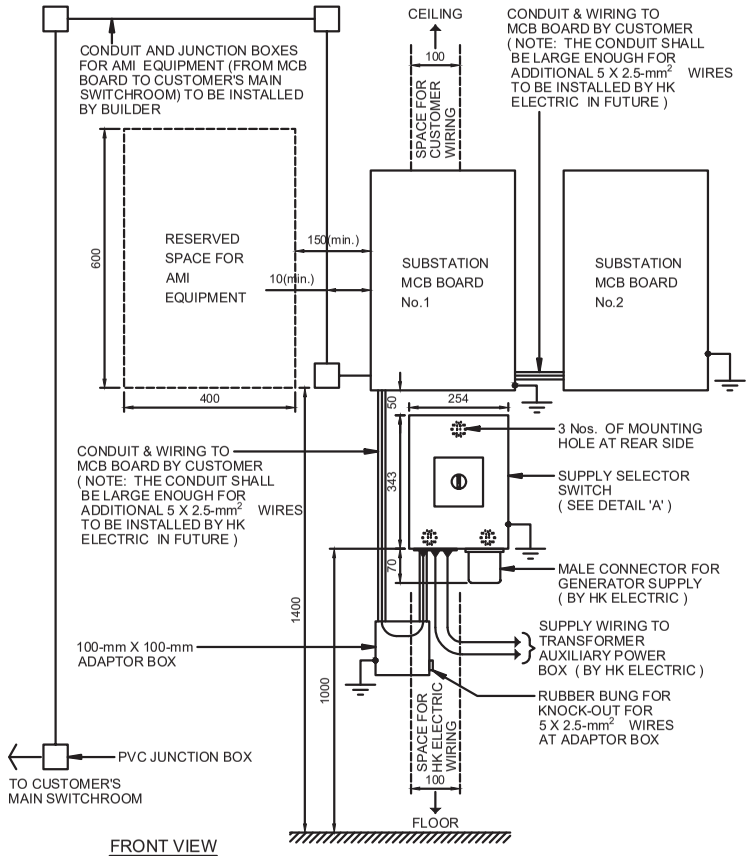

FRONT VIEW

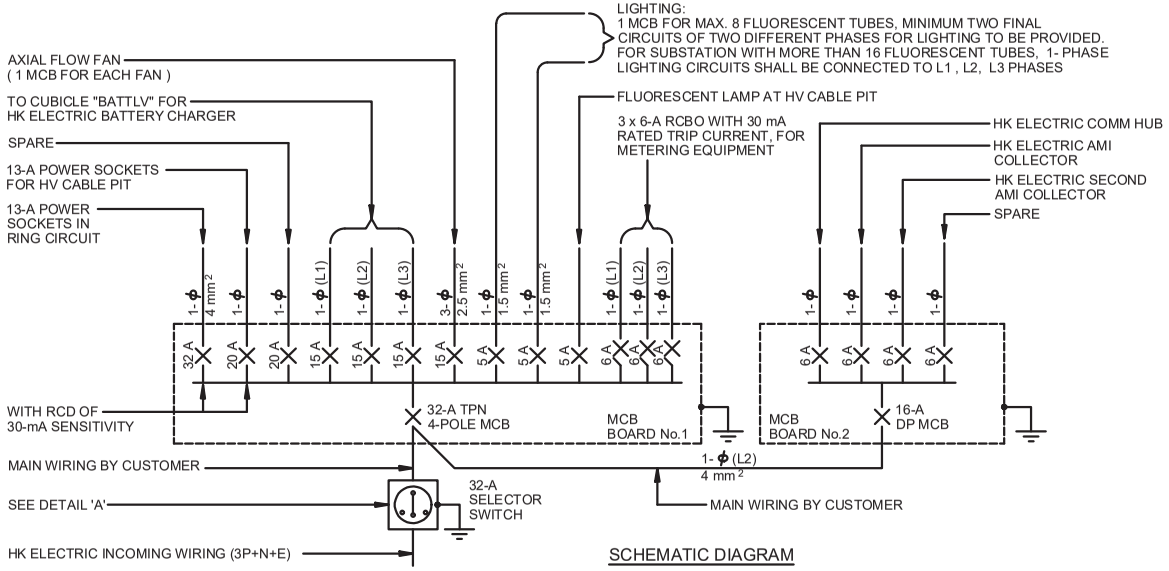

SCHEMATIC DIAGRAM

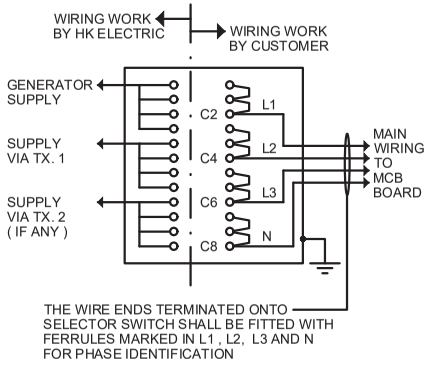

DETAIL 'A'

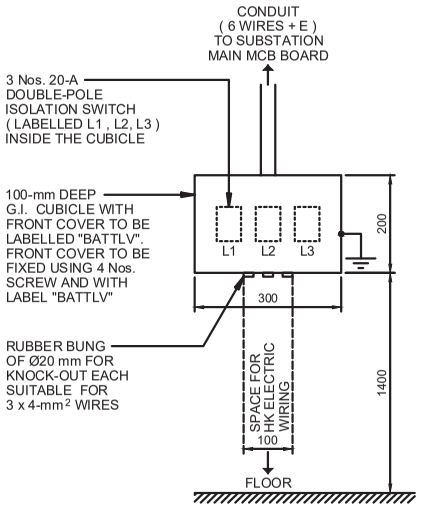

CUBICLE "BATTLV"

(CUBICLE FOR BATTERY CHARGER LV SUPPLY)

REFER TO SUBSTATION LAYOUT DRAWING FOR EXACT LOCATION

NOTES :

1. THE SELECTOR SWITCH SHALL BE ARRANGED AS FOLLOWS:
   - 1.1. 1 No. OF 32-A TP&N SELECTOR SWITCH TO BE SUPPLIED BY HK ELECTRIC FOR SUBSTATION POWER SUPPLY PURPOSE SHALL BE COLLECTED BY CUSTOMER AND INSTALLED AT SITE BY CUSTOMER.
   - 1.2. CUSTOMER SHALL FIT 4 Nos. 6-mm² 1 /C CU/PVC WIRINGS AT TERMINALS C2, C4, C6 & C8. TERMINAL CONNECTION SHALL BE BY MEANS OF CRIMPED RING TYPE LUGS.
   - 1.3. CASING OF SELECTOR SWITCH SHALL BE BONDED TO THE SUBSTATION ELECTRICAL CONDUIT SYSTEM. CUSTOMER SHALL ENSURE THAT THE EARTHING CONNECTION FOR THE SELECTOR SWITCH COMPLIES FULLY WITH HK ELECTRIC SUPPLY RULES AND CODE OF PRACTICE FOR THE ELECTRICITY (WIRING) REGULATIONS.
   - 1.4. THE SELECTOR SWITCH SHALL BE MOUNTED ON WALL BY ANCHOR BOLTS (INCLUDING WASHERS AND NUTS) WITH UNISTRUT AT THE BACK. BOTTOM OF THE SELECTOR SWITCH SHALL BE AT 1000 mm ABOVE FINISHED FLOOR LEVEL. THE SUBSTATION MAIN MCB BOARD SHALL BE NOT LESS THAN 50 mm ON TOP OF THE SELECTOR SWITCH. CUSTOMER WIRINGS SHALL ONLY BE VIA THE TOP OF THE MAIN MCB BOARD.
2. THE CUBICLE "BATTLV" SHALL BE SUPPLIED AND INSTALLED BY CUSTOMER.
3. ALL MCB USED IN MCB BOARD No.1 SHALL HAVE A BREAKING CAPACITY OF NOT LESS THAN 9 kA.
4. MCB BOARD No.2 SHALL COMPLY WITH THE FOLLOWING REQUIREMENTS:
   - 4.1. ALL MCB USED SHALL HAVE A BREAKING CAPACITY OF NOT LESS THAN 9 kA.
   - 4.2. THE 6-A DOUBLE POLE MCB SHALL BE OF TRIPPING CHARACTERISTIC B.
   - 4.3. THE 16-A DOUBLE POLE MCB SHALL BE OF TRIPPING CHARACTERISTIC C.
5. 214-mm (W) X 122-mm (H) ENGRAVED LABEL WITH RED CHARACTERS ON WHITE BACKGROUND AS SHOWN BELOW SHALL BE FIXED ON THE COVER OF MCB BOARD No.2.

Communication Hub and AMI Equipment Power Distribution Board
通訊樞紐及智能電錶基礎設施配電箱

DO NOT DISTURB
請勿干擾

Unauthorised operation is prohibited
未經受權，不得操作配電箱

For enquires, please contact : 2814 3456 (Office hour 辦公時間) 2510 2904 (Outside office hour 非辦公時間)
如有查詢，請致電：

6. ALL THE MCB BOARDS, CUBICLE "BATTLV" AND 32-A SELECTOR SWITCH SHALL BE MOUNTED ON SUBSTATION WALL BY USING UNISTRUT CHANNELS AT THE BACK. PLEASE REFER TO THE SUBSTATION LAYOUT DRAWING FOR THE EXACT POSITIONS OF THE MCB BOARDS AND CUBICLE "BATTLV".
7. ALL DIMENSIONS ARE IN mm.

Drg. No. GCS/3/20

SUBSTATION MAIN SUPPLY & SCHEMATIC DIAGRAM (P561/01/R-10)

1) UPVC PIPE , DUCT SPACER , SOCKET & END CAP FOR Ø150-mm DUCTS/SLEEVES WILL BE PROVIDED BY HK ELECTRIC AND COLLECTED BY THE DEVELOPER. THE NOMINAL LENGTH OF THE UPVC PIPE IS 4 m AND THE DEVELOPER SHALL CUT THE PIPE TO THE REQUIRED LENGTH.

2) UPVC PIPE , SOCKET & END CAP FOR Ø75-mm DUCTS/SLEEVES WILL BE PROVIDED BY HK ELECTRIC AND COLLECTED BY THE DEVELOPER. THE NOMINAL LENGTH OF THE UPVC PIPE IS 4 m AND THE DEVELOPER SHALL CUT THE PIPE TO THE REQUIRED LENGTH.

3) THE MINIMUM SPACING AMONG CABLE ENTRY DUCTS AND BUILDING STRUCTURE , SUCH AS WALLS , COLUMNS , BEAMS , PILING CAPS ETC. FOR A TYPICAL ARRANGEMENT OF DUCTS IN SUBSTATION CABLE ENTRY AS SHOWN BELOW SHALL BE FOLLOWED.

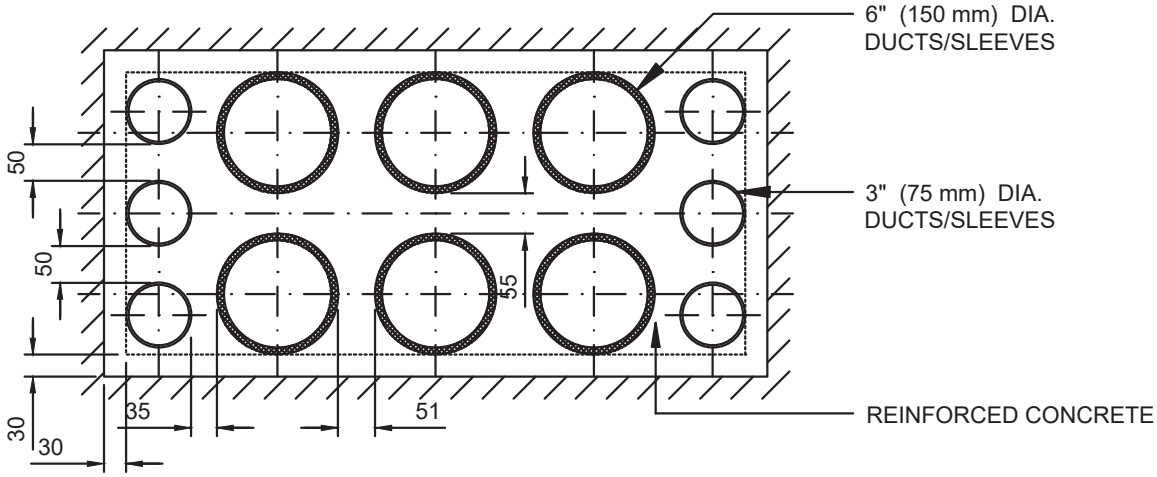

6 X Ø150-mm DUCTS IN 2 LAYERS + 6 X Ø75-mm DUCTS AT BOTH SIDES

4) DUCT SPACERS FOR Ø150-mm DUCTS/SLEEVES SHALL BE INSTALLED AT BOTH ENDS OF THE PRE-CAST CABLE ENTRY DUCT BANK

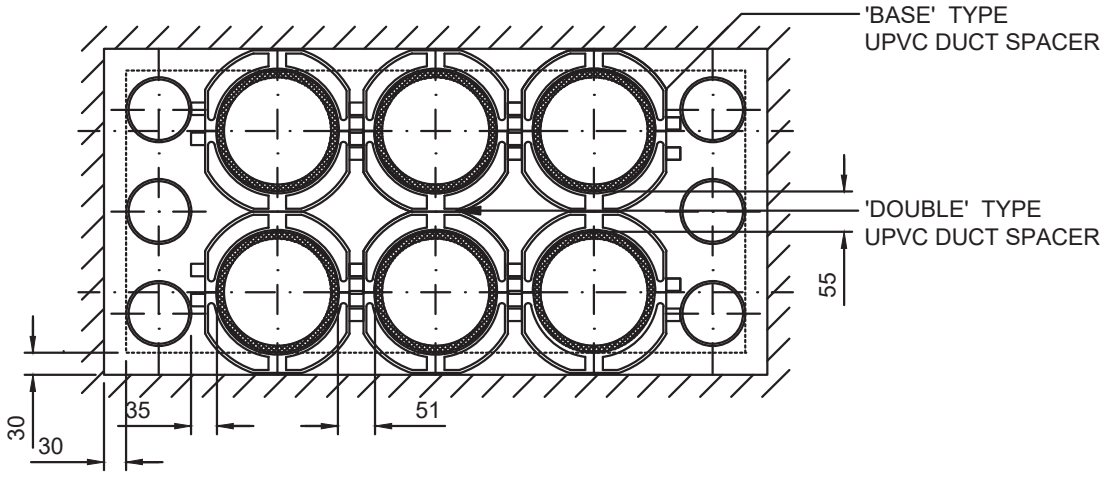

ASSEMBLY OF UPVC DUCTS & UPVC DUCT SPACERS

5) THE CABLE ENTRY OF SUBSTATION SHALL BE PROPERLY SEALED AND WATER-PROOFED AGAINST INGRESS OF WATER BY DEVELOPER.

NOTE : ALL DIMENSIONS ARE IN mm.

Drg. No. GCS/3/21

TYPICAL ARRANGEMENT OF CABLE ENTRY DUCTS IN SUBSTATION (P627/05/R-1) SHEET 1 OF 2

6) CONSTRUCTION OF PRE-CAST DUCT BANK SHALL BE IN GENERAL IN ACCORDANCE WITH THE FOLLOWING :

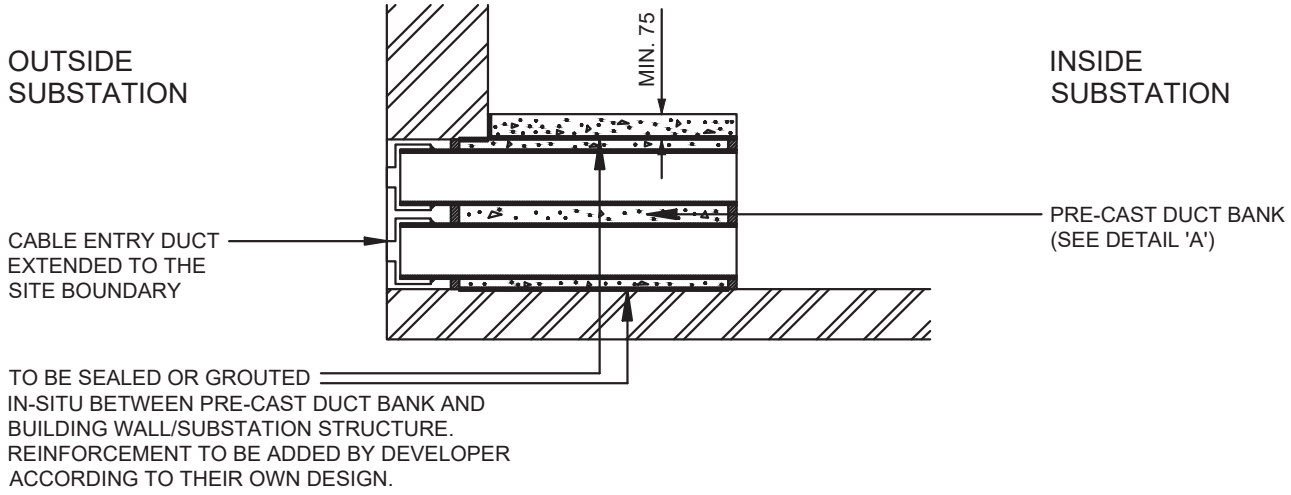

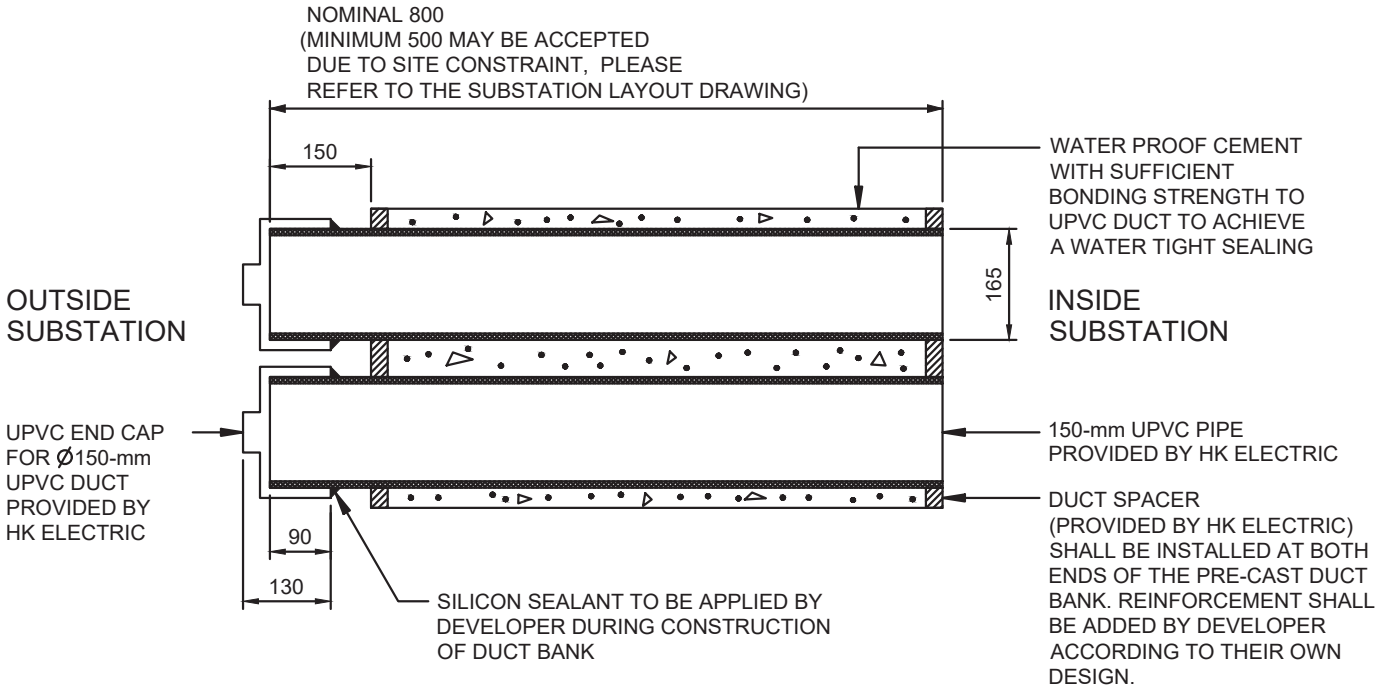

DETAIL 'A'
PRE-CAST CABLE ENTRY DUCT BANK

NOTE : ALL DIMENSIONS ARE IN mm.

Drg. No. GCS/3/21

TYPICAL ARRANGEMENT OF CABLE ENTRY DUCTS IN SUBSTATION (P627/05/R-1) SHEET 2 OF 2

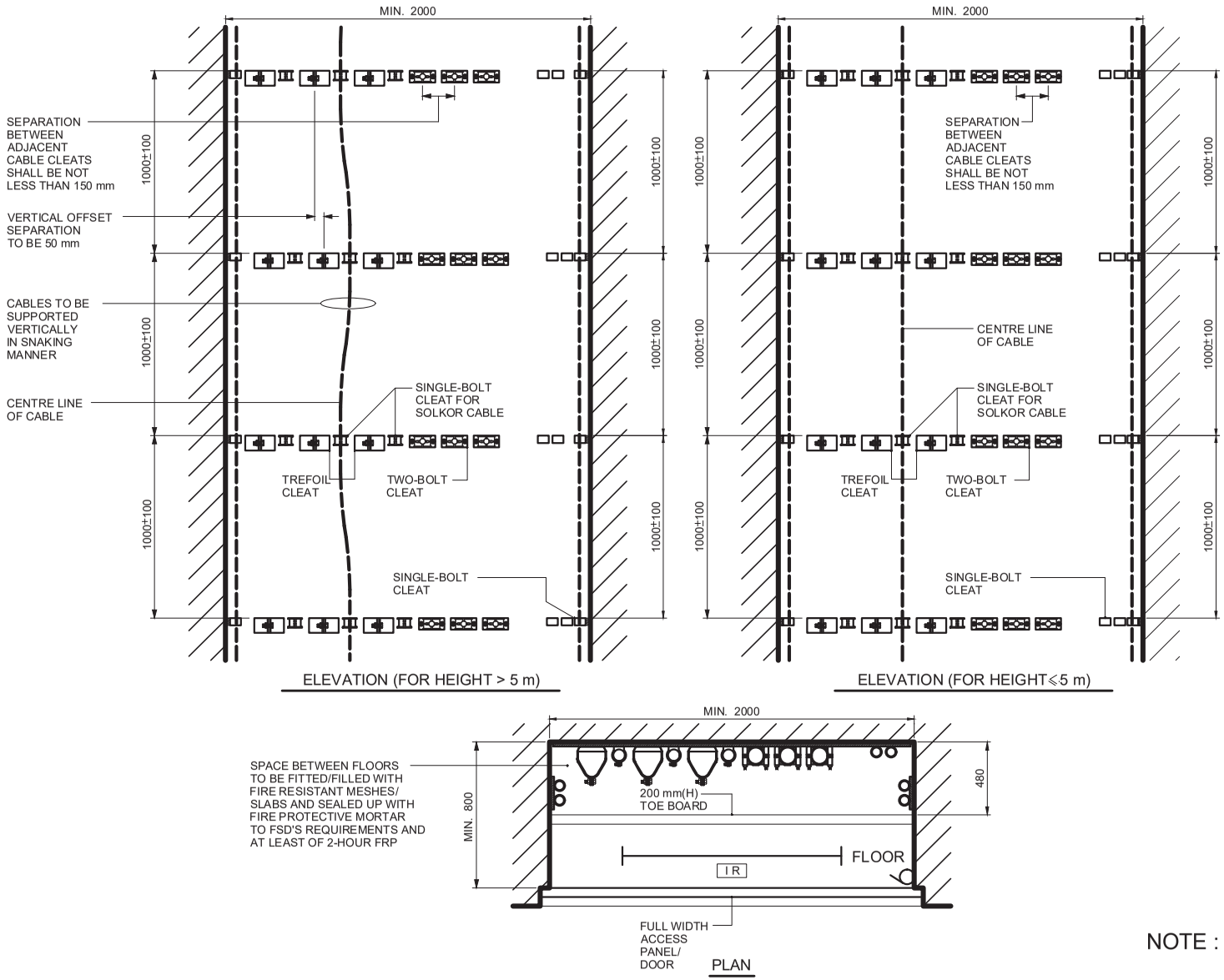

NOTE : ALL DIMENSIONS ARE IN mm.

Drg. No. GCS/3/22

TYPICAL ARRANGEMENT OF CABLES AND CABLE CLEATS IN RISER DUCT (VERTICAL HEIGHT ≤ 7 METRES) (P671/08/R-3) SHEET 1 OF 2

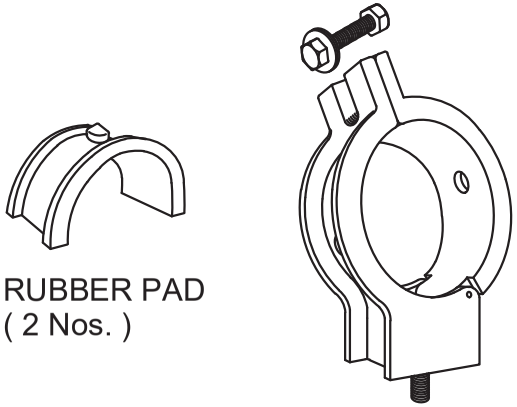

TYPICAL DESIGN OF SINGLE-BOLT CLEAT

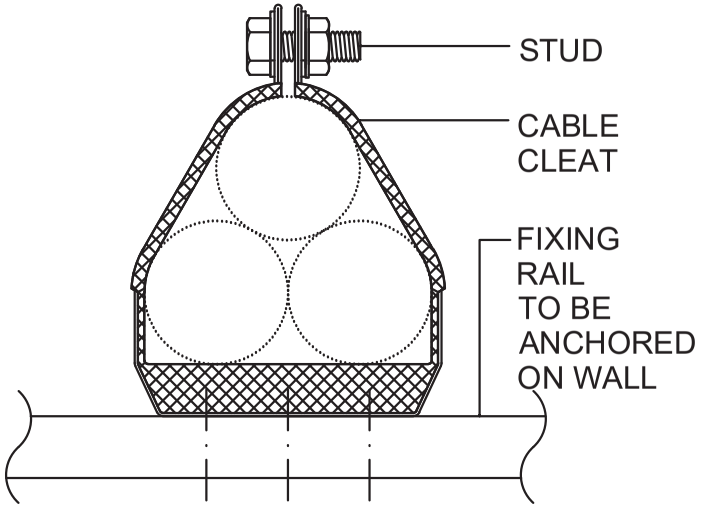

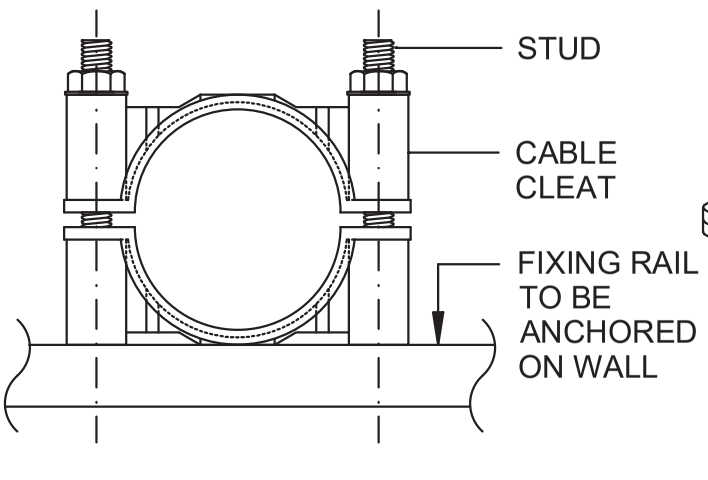

TYPICAL DESIGN OF TWO-BOLT CLEAT

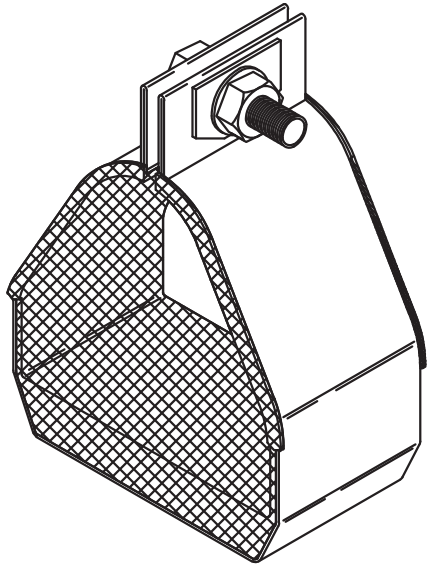

TYPICAL DESIGN OF TREFOIL CLEAT

Drg. No. GCS/3/22

TYPICAL ARRANGEMENT OF CABLES AND CABLE CLEATS
IN RISER DUCT (VERTICAL HEIGHT ≤ 7 METRES)
(P671/08/R-3) SHEET 2 OF 2

Notes for Drawing No. GCS/3/22

1. Customer is required to provide the appropriate type and size of cable cleat to suit the following cables to be installed in riser duct. Exact type of cables to be used will be specified in the substation layout drawing.

2. The developer should be responsible for temporary removal of the cable cleats for HK Electric cable installation for substation commissioning and re-installing the cable cleats after HK Electric cable laying, if so required by HK Electric during the course of their cabling work.

3. External diameters of HK Electric cables are:

Designated code of cable	Cable description	Size	Type of cable cleat to be used
T-2	HV 300-mm^2 3/C Cu cable	101±3 mm	Two-bolt cleat
T-4	HV 300-mm^2 1/C SUSWA Cu cable	53±3 mm	Trefoil cleat
R-3	HV 240-mm^2 3/C Cu cable	91±3 mm	Two-bolt cleat
G-1	LV 300-mm^2 4/C AL cable	73±3 mm	Two-bolt cleat
P-1	Telephone / pilot cable	32±3 mm	Single-bolt cleat
Y-1	Earthing cable	25±3 mm	Single-bolt cleat
S-1	Solkor cable	38±3 mm	Single-bolt cleat

(The designated code of cable will be applied and quoted in the substation layout drawing for reference)

4. Weight of each LV power cable shall be taken as 15 kgf per metre, where weight of each HV 3/C cable or each set of HV 3 x 1/C cable should be taken as 20 kgf per metre.

5. Material of cable cleat and the associated bolts, nuts, washers and spring washers, etc. to be aluminium alloy, other metals or alloy with corrosion resistant coating / plating. Cable cleats of non-metallic material will NOT be accepted.

6. Each trefoil cleat and two-bolt cable cleat shall be type tested to withstand a vertical safe working load (SWL) of not less than 15 times the 1 metre length of the cable to be cleated.

Notes for Drawing No. GCS/3/22

7. Design operating temperature of cable cleat shall be from 0ºC to 85ºC.

8. The cable cleats shall be mounted on suitable fixings. The stud size for trefoil cable cleat and two-bolt cable cleat shall be not less than M12. Rubber pad as a supplementary mat for securing the cable shall be provided for each cable cleat.

9. The horizontal fixing rail shall be of hot dip galvanised steel or other corrosion resistant material and be designed and constructed to withstand a vertical SWL of the higher value of (a) or (b) below.
   a. 1000 kgf.
   b. n times 200 kgf where n is the total number of cleats on the same fixing rail.

10. A clear working space of not less than 900 mm should be provided in front of the cable cleats.

11. Customer is required to submit catalogues and/or samples of cable cleats for approval.

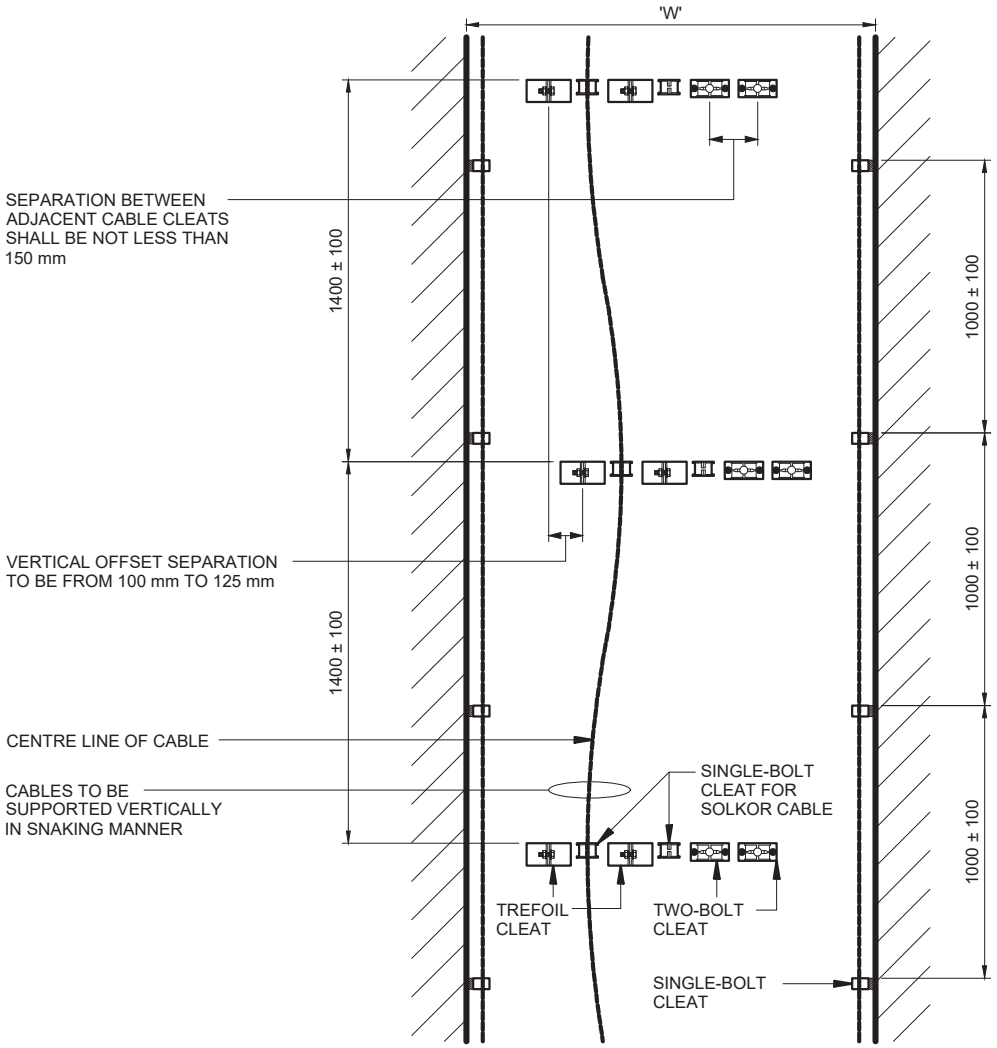

ELEVATION

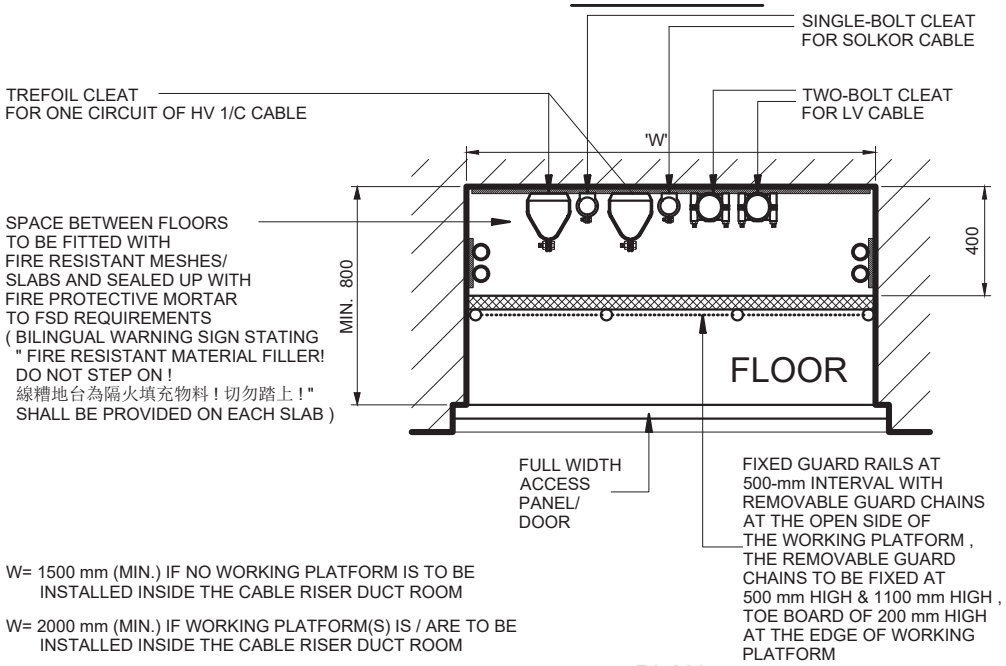

W= 1500 mm (MIN.) IF NO WORKING PLATFORM IS TO BE INSTALLED INSIDE THE CABLE RISER DUCT ROOM

W= 2000 mm (MIN.) IF WORKING PLATFORM(S) IS / ARE TO BE INSTALLED INSIDE THE CABLE RISER DUCT ROOM

PLAN

NOTE : ALL DIMENSIONS ARE IN mm.

Drg. No. GCS/3/23

TYPICAL ARRANGEMENT OF CABLES AND CABLE CLEATS IN RISER DUCT FOR UPPER FLOOR SUBSTATION OR BASEMENT SUBSTATION WITH LEVEL DIFFERENCE EXCEEDING 7 METRES (P666/08/R-4) SHEET 1 OF 2

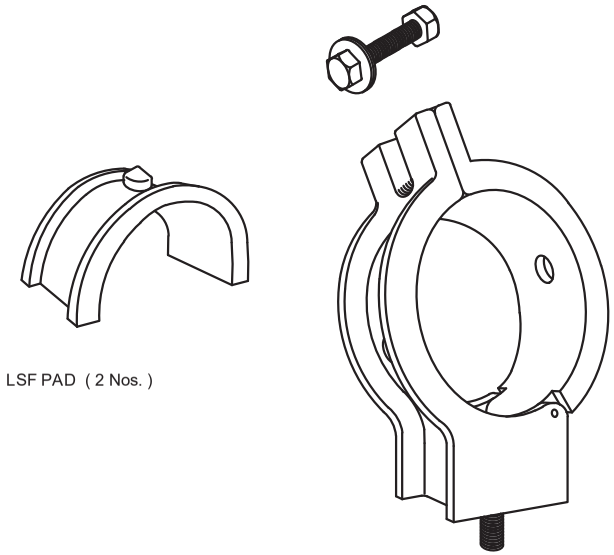

TYPICAL DESIGN OF SINGLE-BOLT CLEAT

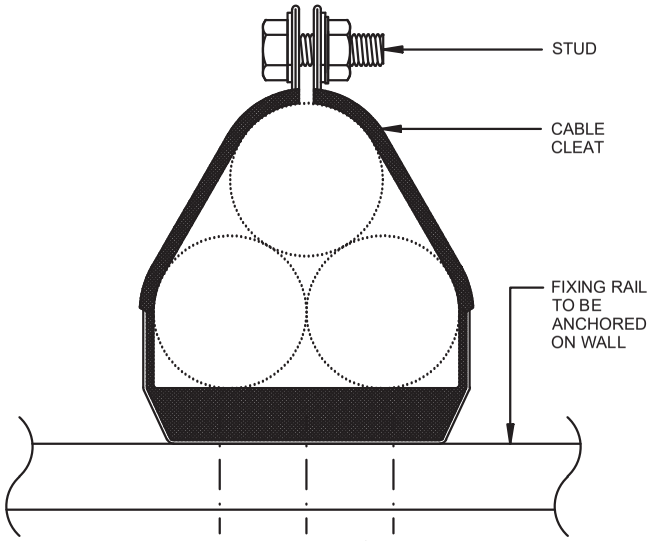

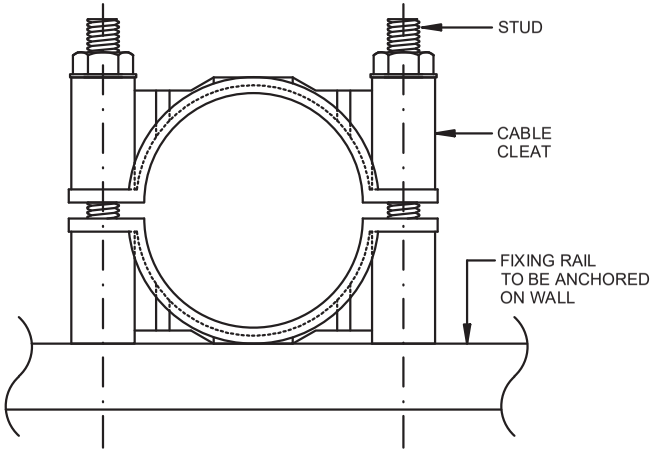

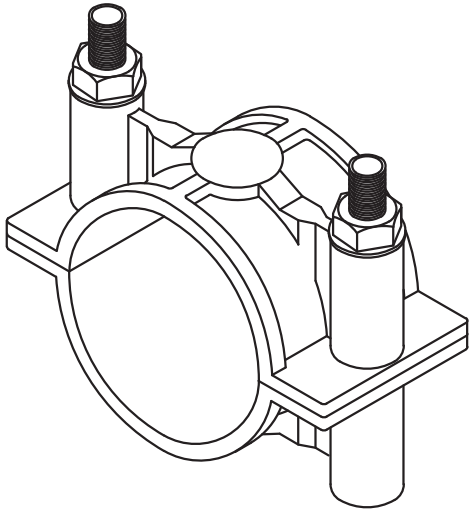

TYPICAL DESIGN OF TWO-BOLT CLEAT

(NON-METALLIC PARTS TO BE LSF)

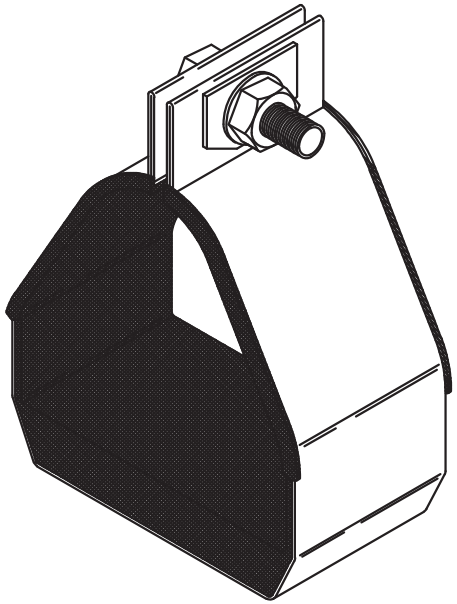

TYPICAL DESIGN OF TREFOIL CLEAT

(NON-METALLIC PARTS TO BE LSF)

Drg. No. GCS/3/23

TYPICAL ARRANGEMENT OF CABLES AND CABLE CLEATS IN RISER DUCT FOR UPPER FLOOR SUBSTATION OR BASEMENT SUBSTATION WITH LEVEL DIFFERENCE EXCEEDING 7 METRES (P666/08/R-4) SHEET 2 OF 2

Notes for Drawing No. GCS/3/23

1. Customer is required to provide the appropriate type and size of cable cleat to suit the following cables to be installed in riser duct. Exact type of cables to be used will be specified in the substation layout drawing.

2. The developer should be responsible for temporary removal of the cable cleats for HK Electric cable installation for substation commissioning and re-installing the cable cleats after HK Electric cable laying, if so required by HK Electric during the course of their cabling work.

3. External diameters of HK Electric cables are:

Designated code of cable	Cable description	Size	Type of cable cleat to be used
T-3	HV 300-mm^2 1/C Cu LSF cable	50±3 mm	Trefoil cleat
R-2	HV 240-mm^2 3/C Cu LSF cable	81±3 mm	Two-bolt cleat
G-2	LV 300-mm^2 4/C AL LSF cable	73±3 mm	Two-bolt cleat
S-2	LSF Solkor cable	38±3 mm	Single-bolt cleat
P-2	Telephone/Pilot LSF cable	32±3 mm	Single-bolt cleat
Y-2	Earthing LSF cable	25±3 mm	Single-bolt cleat

(The designated code of cable will be applied and quoted in the substation layout drawing for reference)

4. Material of cable cleat and the associated bolts, nuts, washers and spring washers, etc. should be of aluminium alloy, other metals or alloy with corrosion resistant coating / plating. Cable cleats of non-metallic material will NOT be accepted.

5. Each trefoil cleat and two-bolt cleat shall be type tested to withstand a vertical safe working load (SWL) of not less than 15 times the 1.4 metre length of the cable to be cleated. Each single-bolt cleat shall be type tested to withstand a vertical SWL of not less than 15 times of the cable to be cleated which should be taken as 4 kgf per metre.

6. Weight of each LV power cable shall be taken as 15 kgf per metre, where weight of each HV 3/C power cable or each set of HV 3 x 1/C power cable shall be taken as 20 kgf per metre.

Notes for Drawing No. GCS/3/23

7. The horizontal fixing rail shall be of hot dip galvanised steel or other corrosion resistant material and be designed and constructed to withstand a vertical SWL of the higher value of (a) or (b) below.
   a. 1000 kgf.
   b. n times 200 kgf where n is the total number of cleats on the same fixing rail.

8. The cable cleats shall be mounted on suitable fixings. The stud size for trefoil cleat and two-bolt cleat shall be not less than M12. LSF lining or pad as a supplementary mat for securing the cable shall be provided for each cable cleat.

9. Design operating temperature of cable cleat shall be from 0ºC to 85ºC.

10. Customer is required to submit catalogues and/or samples of cable cleats for approval.

11. LSF stands for low smoke fume and zero halogen to IEC, BS, UL or ASTM standards.

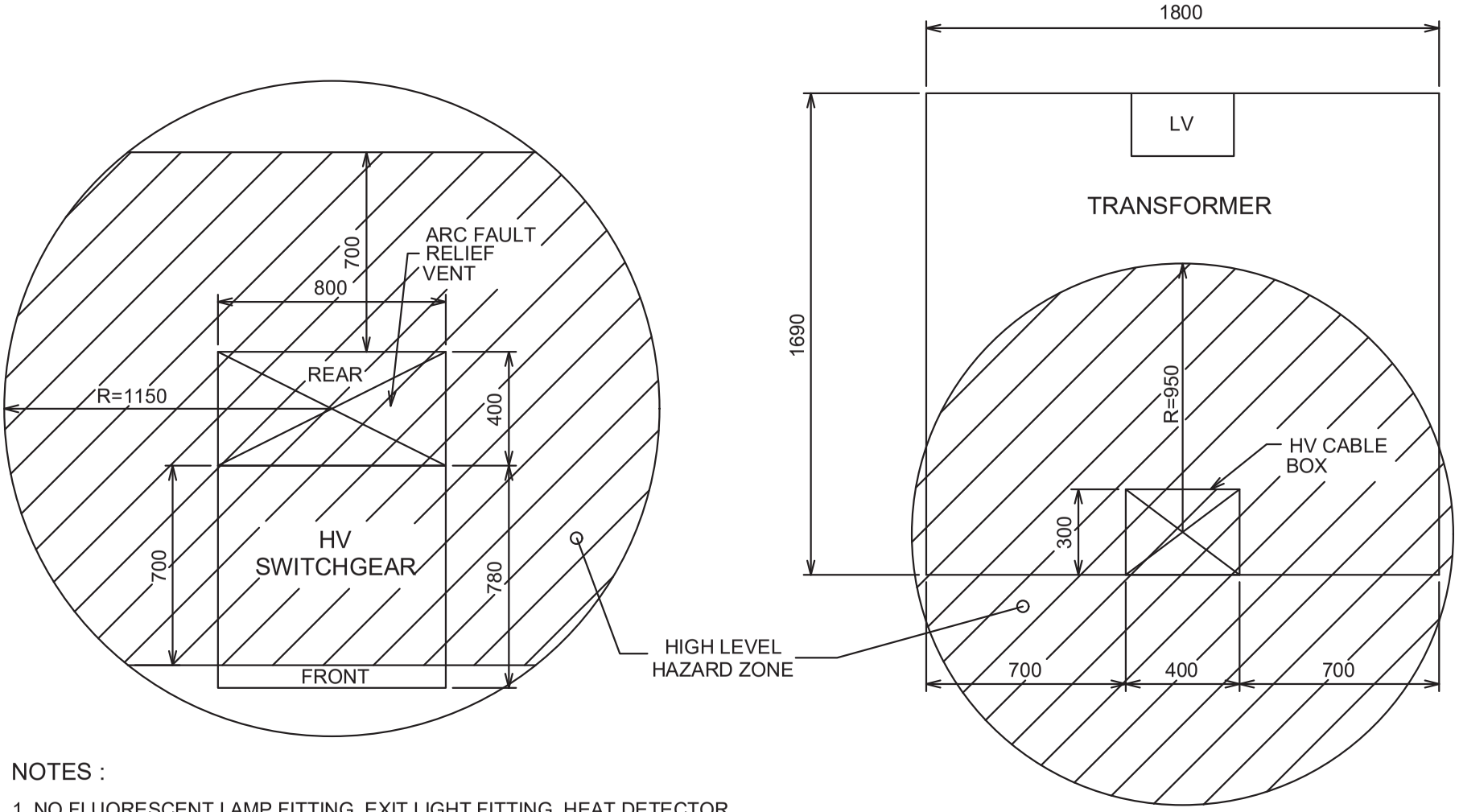

NOTES :

1. NO FLUORESCENT LAMP FITTING, EXIT LIGHT FITTING, HEAT DETECTOR, SMOKE DETECTOR, AXIAL FLOW FAN, FLEXIBLE CONDUIT FOR FAN AND EMERGENCY PUSH BUTTON FOR FAN SHALL BE INSTALLED WITHIN THE HIGH LEVEL HAZARD ZONE UNLESS THEY ARE AT LESS THAN 2300 mm HIGH WHEN MEASURED FROM SUBSTATION FLOOR.
2. ALL DIMENSIONS ARE IN mm.

Drg. No. GCS/3/24

HIGH LEVEL HAZARD ZONE (P346/97)

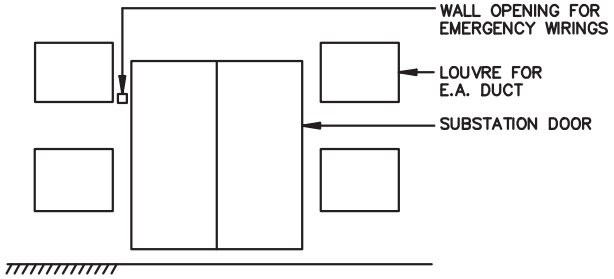

FRONT VIEW OF SUBSTATION

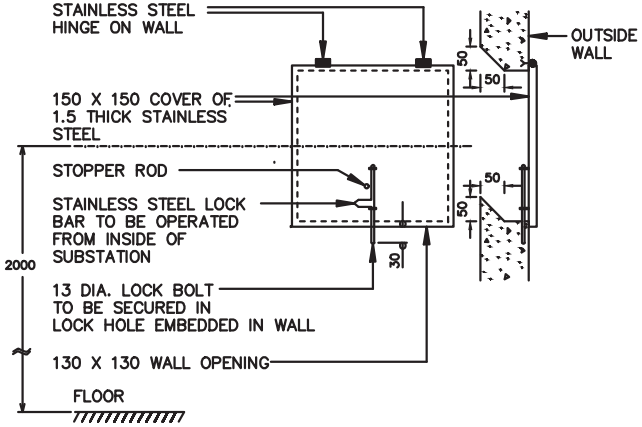

DETAILS OF WALL OPENING
FOR EMERGENCY WIRINGS

(ONLY FOR SUBSTATION
AT GROUND LEVEL)

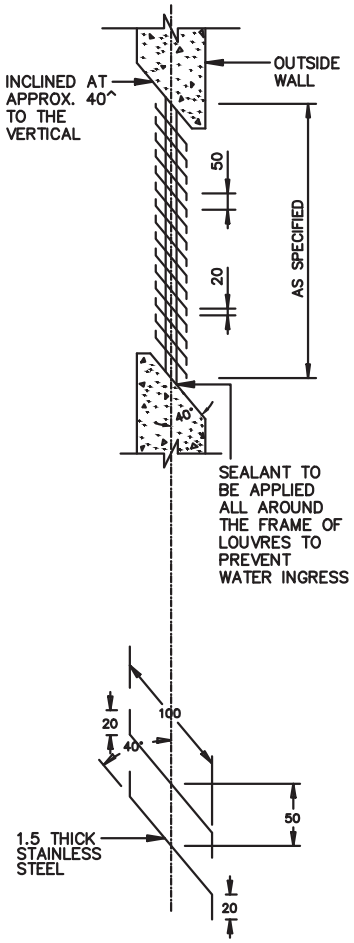

VENT. LOUVRES DETAILS

NOTES :

1. STAINLESS STEEL REFERRED IN THIS DRAWING SHALL BE OF GRADE 316.
2. LOUVRE PLATES SHALL BE ROUNDED TO AVOID LACERATION HAZARD.
3. ALL DIMENSIONS ARE IN mm.

Drg. No. GCS/3/25

SUBSTATION LOUVRES DETAILS (P638/06/R-1)

香港電燈有限公司
THE HONGKONG ELECTRIC CO., LTD.

Do you know that HK Electric has to apply for an Excavation Permit from Highways Department of HKSAR Government before laying a cable to make electricity available to you?

Here are some facts on how HK Electric applies for the Excavation Permit, how much it costs to HK Electric and how long it will take.

Summary of amended Ordinance effective on 1st April 2004 for Excavations in Public Streets and Footpaths

- All excavations are controlled under the Land (Miscellaneous Provisions) Ordinance, Cap. 28.

- An Excavation Permit is required for excavations in unleased Government land, otherwise a fine up to $50,000 and an imprisonment for 6 months can be imposed. In majority of cases, HK Electric applies for Excavation Permit from Highways Department*.

  * For minority of cases, HK Electric has to apply for permit from other Government authority.

- Fees to be paid by HK Electric for each Excavation Permit granted by Highways Department.

Application Fee	HK$2,360 / permit
Daily Fee	HK$40 / day
Extension Fee	HK$750 / permit

- Unless with accepted reasons, a daily economic cost will be charged to HK Electric if HK Electric does not complete the excavations involving carriageway on time and extension is required.

Strategic Streets	HK$23,600 / day
Sensitive Streets	HK$9,120 / day
Streets other than the above two classes	HK$1,850 / day

Drg. No. GCS/3/26
INFORMATION ON APPLICATION FOR EXCAVATION PERMIT SHEET 1 OF 2

Time required for HK Electric to register and submit an application for an Excavation Permit before work commencement:

1. Minimum Registration Lead Time:

Works on carriageway of trunk roads or works on any carriageway exceeding 3 months	**6 months**
Works on carriageway other than trunk roads not exceeding 3 months or works not on carriageway but exceeding 3 months	**2 months**
Works not on carriageway and not exceeding 3 months	**1 month**

2. HK Electric is also required to coordinate with other utility undertakers for the program of work such that the overall disturbance brought to the public will be kept to a minimum before Highways Department granting the Excavation Permit. These utility undertakers include the telecommunication service companies, Gas Company, Drainage Service Department, Water Supplies Department, and etc. Also, Highways Department imposes a 3-month excavation restriction period after excavation by all other Utilities Undertakings to avoid repeated excavation in the same location. A 6-month restriction period will be imposed by Highways Department after excavation by HK Electric at the same location.

3. HK Electric has to obtain consent from Transport Department and Hong Kong Police Force of the proposed excavation work before Highways Department grants the Excavation Permit to HK Electric. With the current arrangement, Transport Department and Hong Kong Police Force will only provide comments to HK Electric excavation proposals for the excavation works in Traffic Management Liaison Group Meeting (TMLG Meeting) with limited meeting time each month.

4. HK Electric may be required to approach the following parties for their comments or consent of the excavation work before Highways Department grants the Excavation Permit to HK Electric:

   - Environmental Protection Department
   - Leisure and Culture Services Department
   - Architectural Services Department
   - MTR Corporation Limited
   - E&M Services Department

5. Overall time required for obtaining an Excavation Permit from Highways Department:

   More than 10 weeks (excluding the registration time) for a typical case in footpath.

For more information: You may visit the website of Highways Department http://www.hyd.gov.hk for more details on Excavation Permit.

Drg. No. GCS/3/26
INFORMATION ON APPLICATION FOR EXCAVATION PERMIT SHEET 2 OF 2

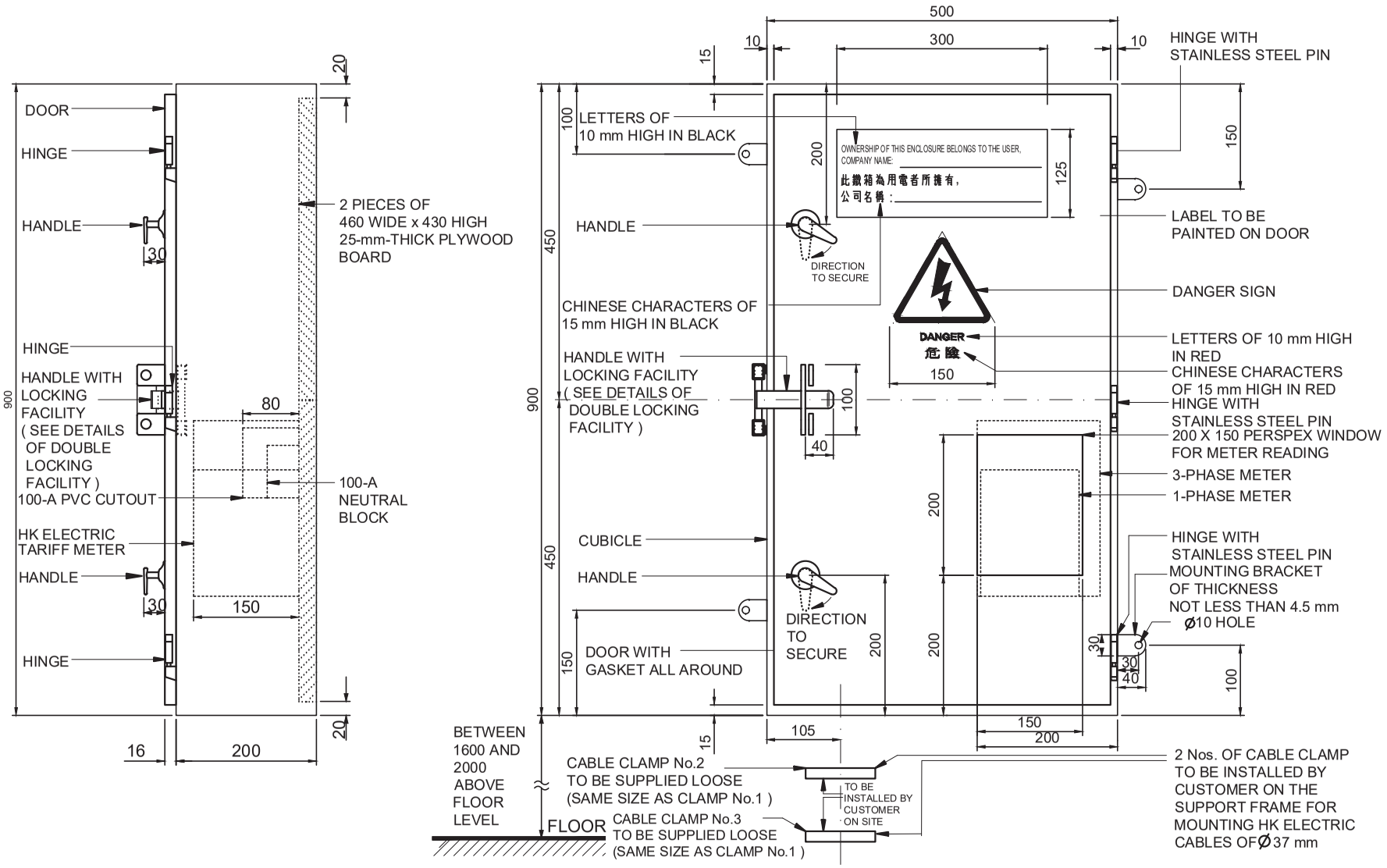

NOTE : ALL DIMENSIONS ARE IN mm.

Drg. No. GCS/3/27

MILD STEEL WEATHERPROOF ENCLOSURE FOR SITE SERVICES UP TO 100 A 3-PHASE (P630/06/R-2) SHEET 1 OF 4

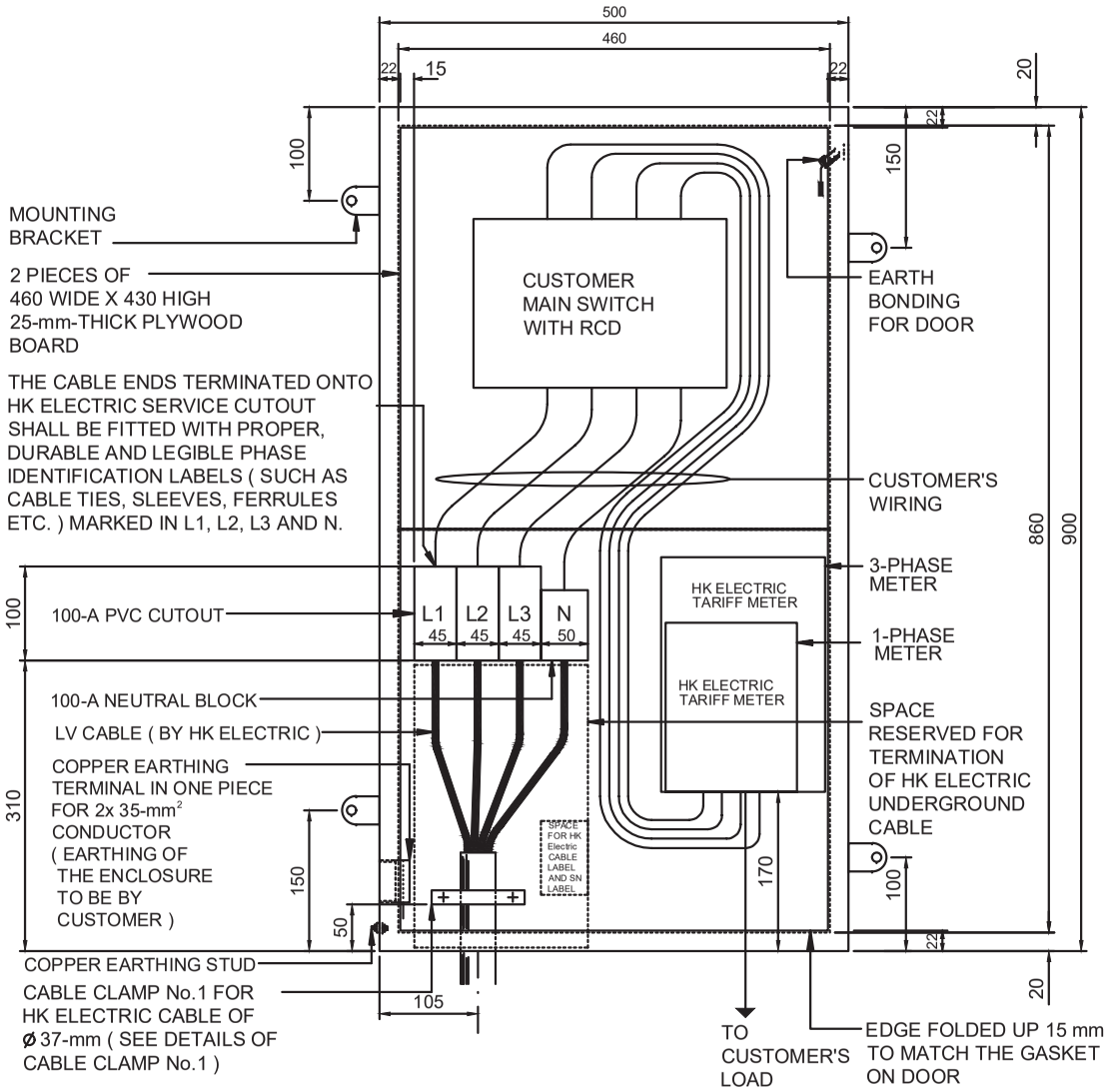

INNER FRONT VIEW

(ENCLOSURE DOOR OMITTED FOR CLARITY)

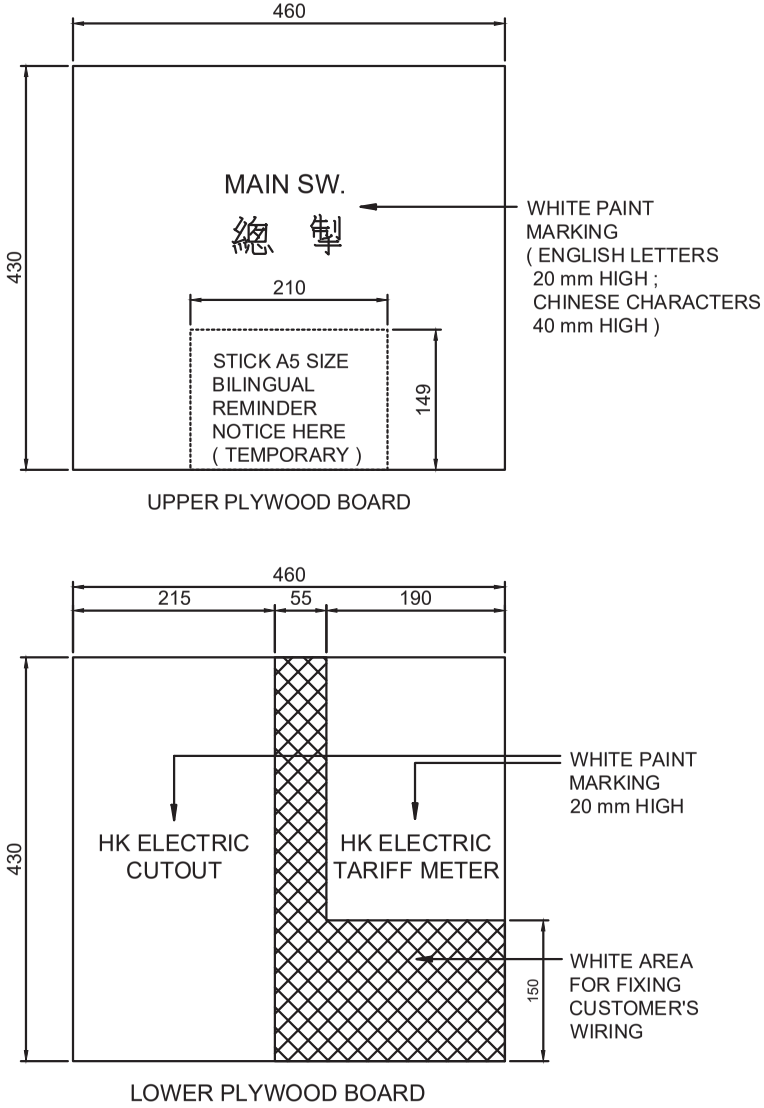

DETAILS OF PLYWOOD BOARD

NOTE : ALL DIMENSIONS ARE IN mm.

Drg. No. GCS/3/27

MILD STEEL WEATHERPROOF ENCLOSURE FOR SITE SERVICES UP TO 100 A 3-PHASE (P630/06/R-2) SHEET 2 OF 4

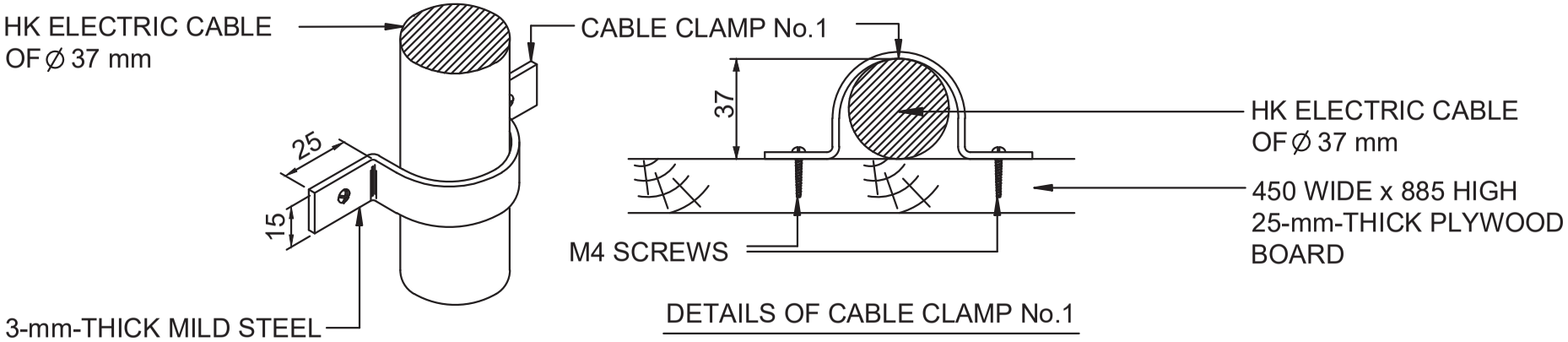

DETAILS OF CABLE CLAMP No.1

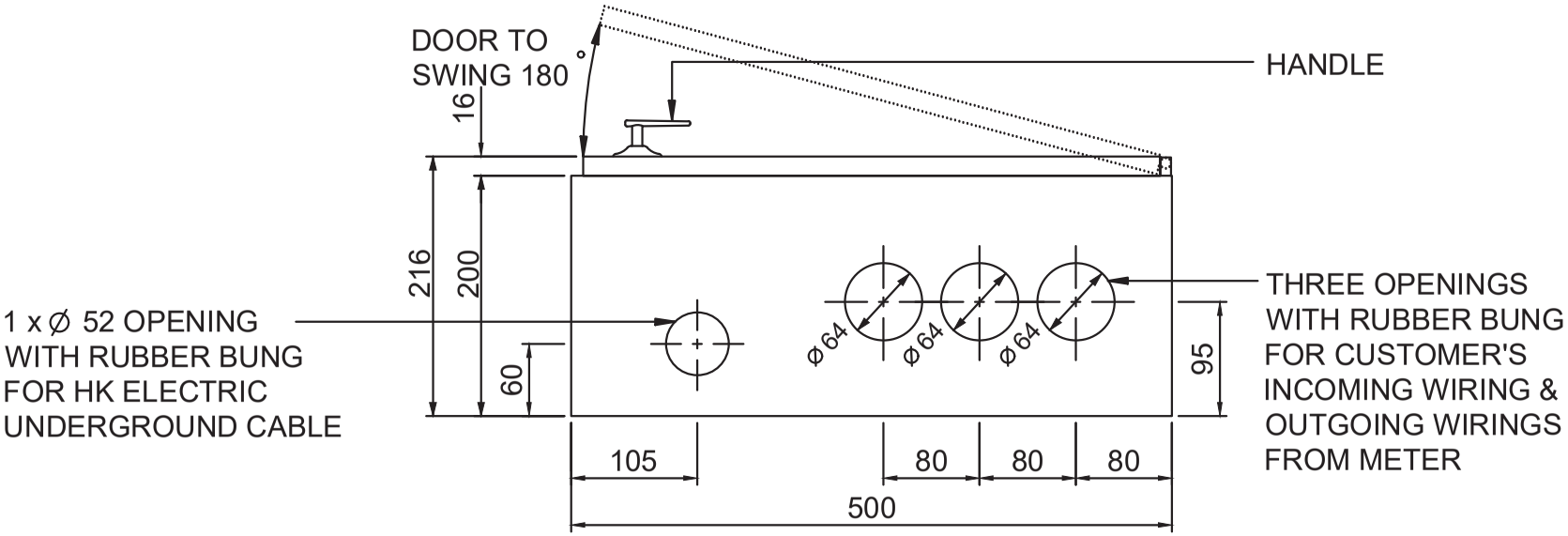

BOTTOM VIEW

NOTE : ALL DIMENSIONS ARE IN mm.

Drg. No. GCS/3/27

MILD STEEL WEATHERPROOF ENCLOSURE FOR SITE SERVICES UP TO 100 A 3-PHASE (P630/06/R-2) SHEET 3 OF 4

NOTES :

1. THE ENCLOSURE TOGETHER WITH HK ELECTRIC SERVICE CUTOUT, METER AND WIRING (EXCLUDING CUSTOMER MAIN SWITCH) IS OF APPROXIMATE WEIGHT OF 40 kg.
2. CUSTOMER SHALL PROVIDE ROBUST STEEL SUPPORT FRAME FOR MOUNTING THE ENCLOSURE TO ENSURE SAFETY EVEN DURING TYPHOON SEASON.
3. THE ENCLOSURE SHALL BE COLLECTED AND INSTALLED BY CUSTOMER AND WILL BE SUBSEQUENTLY LOCKED BY CUSTOMER AND BY HK ELECTRIC.
4. ALL DIMENSIONS ARE IN mm.

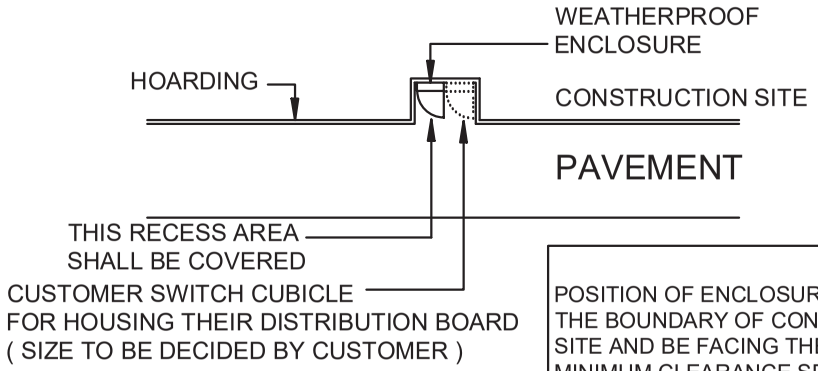

LOCATION PLAN

POSITION OF ENCLOSURE SHALL BE AT THE BOUNDARY OF CONSTRUCTION SITE AND BE FACING THE PAVEMENT. A MINIMUM CLEARANCE SPACE OF 900 mm FOR THE FULL WIDTH IN FRONT OF ENCLOSURE SHALL BE PROVIDED. A CLEAR ACCESS TO THE ENCLOSURE SHALL BE PROVIDED WITHOUT ANY OBSTRUCTION FROM COVERED WALKWAY.

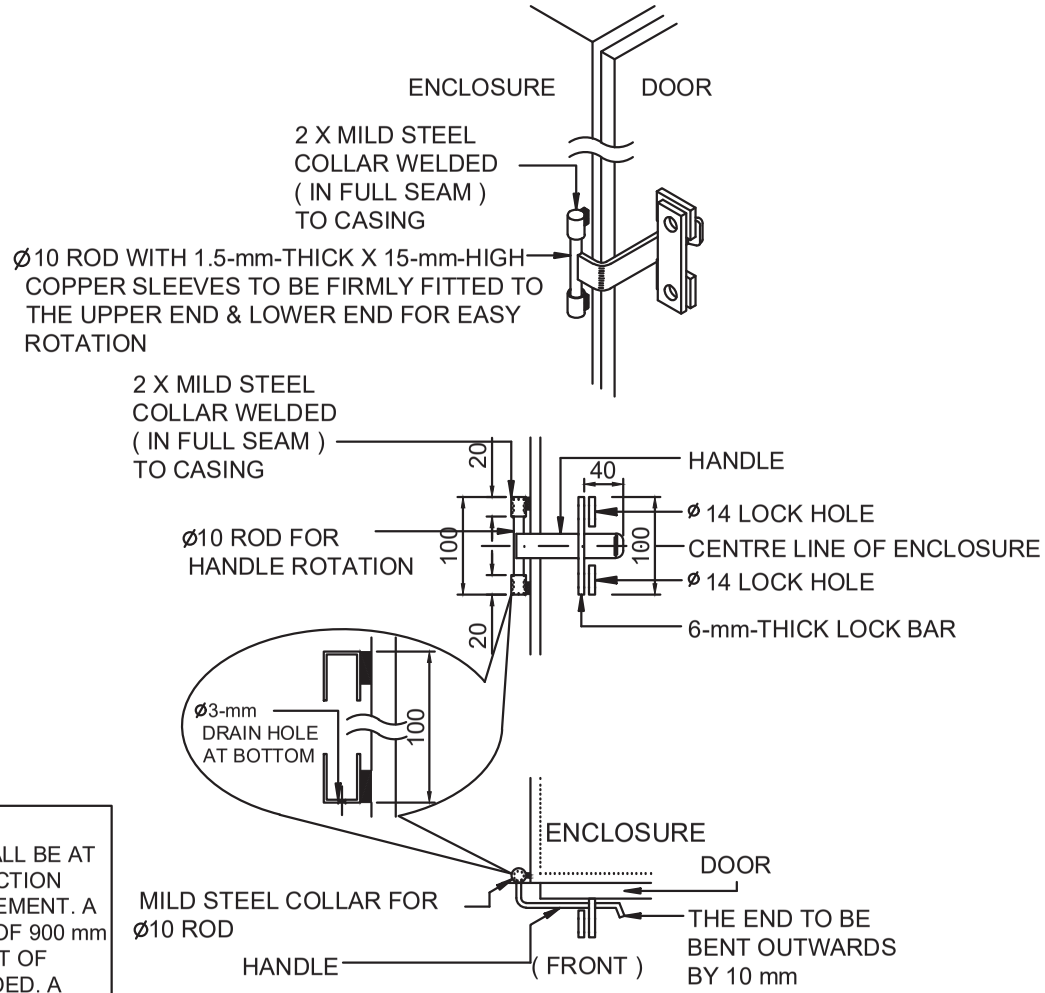

DETAILS OF DOUBLE LOCKING FACILITY

Drg. No. GCS/3/27

MILD STEEL WEATHERPROOF ENCLOSURE FOR SITE SERVICES UP TO 100 A 3-PHASE (P630/06/R-2) SHEET 4 OF 4

1. In general the operation of a substation door with decoration cladding or a decorative door in addition to the standard substation door would occupy much larger area of pavement in front of the substation. Any such decorative features on the substation door or the addition of a decorative door should be avoided as far as practicable from operational point of view. In case any substation door is of such design and/or an additional decorative door in front of the substation door is proposed, HK Electric shall have the discretion on the acceptance of such proposal depending on the actual site situation. The architect/ developer shall submit their proposal in the substation design stage for HK Electric consideration. This drawing depicts only the general conditions on acceptance of an additional decorative door in front of the substation door of a ground floor substation and/or attaching external decorative cladding to substation door for reference purpose.

2. General requirements for both the substation door with decoration cladding and the additional decorative door in front of the standard substation door of a substation at ground floor

2.1 A canopy above the substation door shall be provided according to HK Electric drawing.

2.2 A space of not less than 1,000 mm (H) x 600 mm (W) at 1,400 mm centre above pavement level, with proper mounting facilities shall be provided for mounting the substation name plates and warning sign on external surface of the door.

2.3 The proposed additional door or decorative louvres/cladding on the standard substation door shall not result in any adverse effect on the substation ventilation system and a minimum flow rate as stipulated in the substation layout drawing shall be achieved when the substation ventilation system is operating. A site measurement is required to confirm compliance after the decorative louvres/cladding or the additional decorative door is installed.

2.4 In case there is any defect/malfunction of the substation ventilation system which may affect the substation temperature, the developer shall be responsible for keeping the additional door fully open (or dismantling the additional door if keeping the additional door open in a prolonged manner is not allowed due to the possible obstruction at site) / detaching the decorative louvres/cladding from the substation door to facilitate the air circulation upon request by HK Electric.

2.5 A confirmation letter shall be provided from the developer to undertake the responsibilities for future repair/ maintenance of the additional substation door and the proposed decorative louvres/cladding on both the substation door and the external wall in case of damage by HK Electric during initial equipment delivery and future transportation of supply apparatus to and from the substation. The letter shall also confirm their compliance with all the requirements stipulated in this Drawing. A copy of as-built drawing with photos specifying the decorative louvres/cladding on both the substation door and the external wall being covered by the above undertaking letter shall be submitted for record after occupation permit of the development is granted.

2.6 Substation Door Swing

The substation door shall be able to fully open with 180 degree swing with a clear opening of not less than 2.0 m (W) x 2.6 m (H) after the substation door and the additional decorative door have been fully opened for transportation of HK Electric equipment to and from the substation. A 150 degree swing of the substation door while maintaining a clear opening of not less than 2.0 m (W) x 2.6 m (H) will also be acceptable provided the following conditions are met:

(i) The substation door and the additional decorative door, when being opened outwards over any street, must not cause an obstruction to any person or vehicle using the street.

(ii) The substation door is facing a street with footpath of clear width of more than 2.5 m where manual transportation of HK Electric equipment to and from the substation is allowed, or a 2m wide clearance in the footpath in front of the substation door opening can be maintained when both the substation door and the decorative door are fully opened. Otherwise an arrangement for transportation of HK Electric equipment to and from the substation via the substation door should be provided by the architect/ developer for agreement/acceptance by HK Electric.

(iii) Stoppers shall be designed and provided to prevent the decorative louvres/cladding from being damaged in the course of movement of the substation door. Stopper(s) shall also be provided for the additional door by the same token.

(iv) Latch or similar means shall be designed and provided to secure the decorative door and the standard substation door at its fully open positions to avoid swinging back of the door(s) in case of strong wind condition.

2.7 The decorative louvres/cladding on the substation door and/ or the additional decorative door shall not obstruct the operations of the lockbar of the standard substation door and shall not endanger the operator when opening and carrying out the locking/unlocking operation of the substation door/ additional door.

3. Other requirements for additional door in front of a standard substation door of a ground floor substation

3.1 The additional decorative door fitting shall be of suitable size which could allow smooth operation and shall comply fully with the following requirements:

(i) At least 4 Nos. of hinges shall be provided at each door leaf. The hinges shall be so designed such that the Door will open in the direction of egress. Life lubricated hinges shall be provided.

(ii) For double door, the right hand side leaf shall be opened first when viewed from outside.

(iii) Pull handles of stainless steel shall be provided for single door and for both leaves of double door.

(iv) Equipotential bonding shall be provided for the additional door according to the latest edition of Code of Practice for the Electricity (Wiring) Regulations published by Hong Kong SAR Government.

3.2 The decorative door and its frame shall not obstruct future maintenance/replacement of the standard substation door.

3.3 The development owner/management company is not allowed to apply lock of any form on the additional door. In case locking of such additional door is necessary, a stainless steel lock bar shall be provided and be suitable for HK Electric pad lock with shackle diameter of 14 mm, a clear inside width of 20 mm and inside length of 16 mm. The position of lock bar shall be at 1100 mm to 1500 mm above finished floor level. For Double Door, the lock bar shall be on the left hand side leaf when viewed from outside. Vertical bolts shall be provided for the left hand side leaf to secure in position before closing the right hand side leaf.

3.4 In addition to the requirement of providing proper facilities for mounting HK Electric door label/warning sign as described in above item 2.2, the development owner is also required to post a durable sign/label on the additional decorative door to explicitly state their ownership and responsibilities of maintenance/repair of the additional door for easy site identification.

4. Other additional requirements for attaching external decorative louvres/cladding to a standard substation door

4.1 The hinges of the door shall be designed and constructed to withstand the operating weight of the door with the proposed decorative louvres/cladding plus 50 kg (assuming at centre of door leaf) in order to cater for the weight of accessories which HK Electric may install onto the door and minimum four Nos. of door hinges shall be provided on each leaf of the doors. For door exceeding the standard height and width, extra hinges shall be provided.

4.2 For 1/F substation or substation with same arrangement of equipment transportation as specified by HK Electric, decorative louvres/cladding shall be attached to the substation door as far as practicable and the decorative louvres/cladding on top of the substation door, if any, shall be detachable to avoid any damage during the operation of equipment transportation. For exceptional case approved by HK Electric that the decorative louvres/cladding are mounted on the external wall of building, the developer is responsible for arranging facilities and manpower for closing/opening of the decorative louvres/cladding for HK Electric equipment transportation work, inspection and maintenance work, etc. as and when required by HK Electric. In addition, the developer is responsible for closing and making good, if damage, of the decorative louvres/cladding after completion of equipment transportation in case HK Electric is required to arrange opening of the decorative louvres/cladding on behalf of the developer for emergency purpose.

Drg. No. GCS/3/28

CONDITIONS ON ACCEPTANCE OF ATTACHING EXTERNAL DECORATIVE LOUVRES/CLADDING TO SUBSTATION DOOR OR ADDITIONAL DECORATIVE DOOR IN FRONT OF SUBSTATION DOOR OF GROUND FLOOR SUBSTATION (P753/14/R-1)

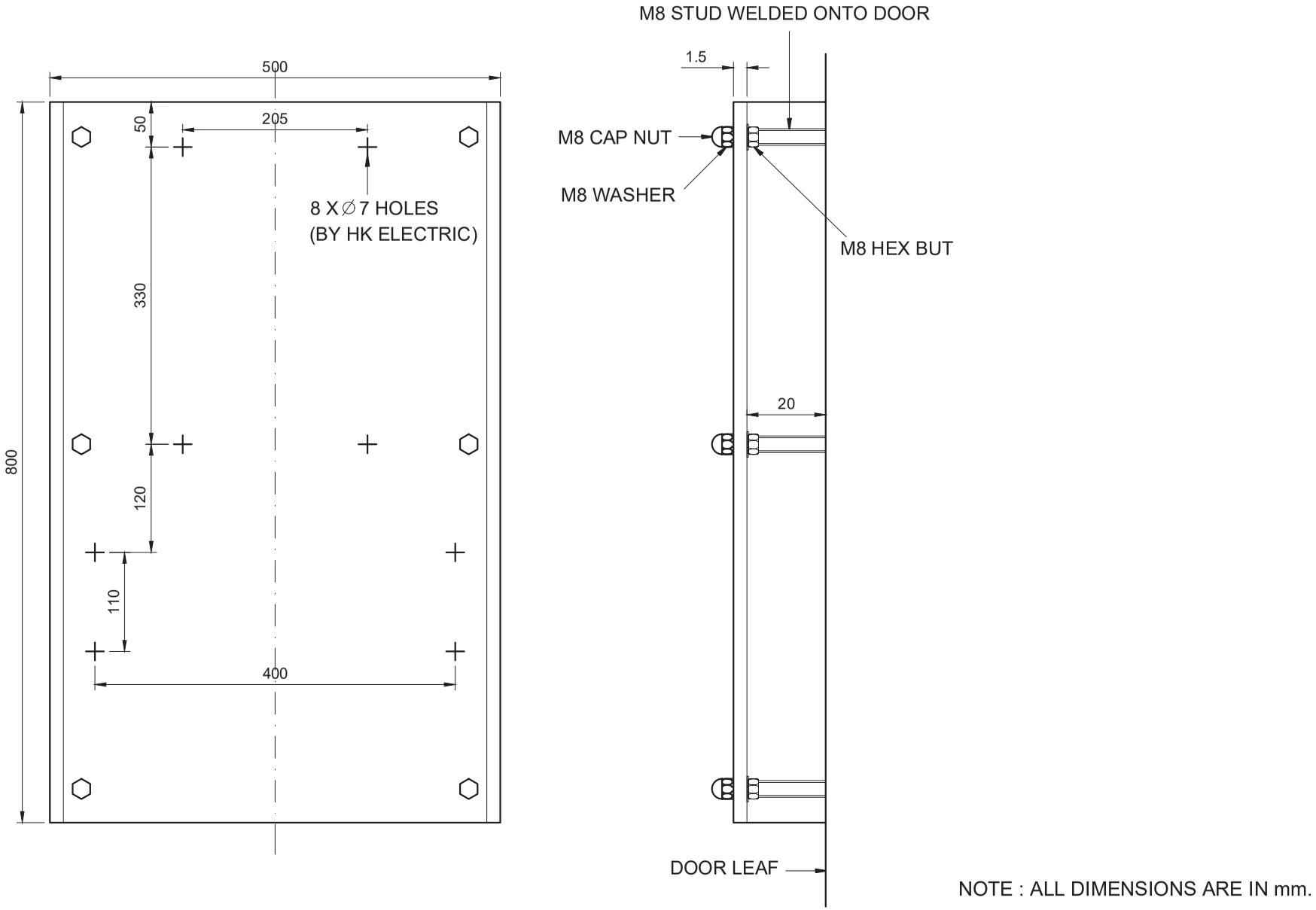

FIGURE (a) : DETAILS OF FIXING ARRANGEMENT FOR LABEL MOUNTING PLATE

(N.T.S.)

Drg. No. GCS/3/29

REQUIREMENTS ON FIRE RESISTING DOOR FOR SUBSTAIONS (P339/97/R-7)

Notes for Drawing No. GCS/3/29

1. Stainless steel referred in this Specification shall mean stainless steel of Grade 316.

2. The Fire Resisting Door (the Door) shall be installed in HK Electric substation only if it is definitely required FSD of HKSAR Government.

3. The Door shall be type tested to the latest edition of BS 476 for:

   a. A Fire Resistance Period required by FSD; or

   b. A Fire Resistance Period of 2 hours,

   whichever the Fire Resistance Period is longer.

4. Before substation hand-over, the following documents shall be submitted to the HK Electric Engineer:

   a. A copy of certificate from the manufacturer stating that the Door has complied with the above tests and all the FSD's requirements.

   b. A confirmation letter from the developer undertaking the responsibilities for future maintenance of the Door.

5. The Door shall be single swing. The Door shall be of double leaf or single leaf as specified by HK Electric. For Double Leaf Door, the right hand side leaf shall be opened first when viewed from outside.

6. Unless otherwise specified by HK Electric in the substation layout drawing, clear opening of the Door shall be of:

   a. Height not less than 2600 mm and width not less than 2000 mm for Double Door.

   b. Height not less than 2300 mm and width not less than 920 mm for Single Door.

7. The facing of the Door shall be of stainless steel sheet of thickness not less than 1.5 mm.

Notes for Drawing No. GCS/3/29

8. Should there be a built-in cylinder lock in the original design of the Door, it shall be rendered inoperative. A stainless steel lock bar shall be provided and be suitable for HK Electric pad lock with shackle diameter of 14 mm, a clear inside width of 20 mm and inside length of 16 mm. The position of lock bar shall be at 1100 mm to 1500 mm above finished floor level. For Double Door, the lock bar shall be on the right hand side leaf when viewed from outside. Vertical bolts shall be provided for the left hand side leaf to secure in position before closing the right hand side leaf.

9. Automatic door closer, if required by FSD or according to FSD's Regulations, shall be provided for the Door. Should self-closing device be installed on the Door, a substation door security rod as detailed in drawing No. P360/97/R-5 shall be provided.

10. Pull handles of stainless steel shall be provided for Single Door and for both leaves of Double Door.

11. At least 4 Nos. of hinges each not less than 80 mm long shall be provided at each door leaf. The hinges shall be so designed such that the Door will open in the direction of egress. Life lubricated hinges shall be provided. The hinges for each leaf of Door must be designed and constructed to withstand the operating weight of the Door plus 50 kgf (assuming at the centre of door leaf) in order to cater for the weight of accessories which HK Electric may install onto the Door.

12. Door stops shall be provided for the closing and the full opening of door leaves.

13. For mounting of HK Electric labels on the Door, a label mounting plate shall be provided on the external surface of the Door for fixing various labels. The label mounting plate shall be:

    a. of stainless steel sheet not less than 1.5 mm thick with folding edges at the long side.

    b. of dimensions 800 mm high and 500 mm wide at the centre of door leaf at right hand side. Bottom of mounting plate shall be at 1400 mm above ground.

c. fixed by means of 6 Nos. of studs welded onto the facing of the Door. The fixing washers and nuts shall be provided. The mounting plate shall be 20 mm away from the door surface. All the studs, fixing washers and nuts shall be of stainless steel.

Details of fixing arrangement for label mounting plate are shown in Figure (a). The label mounting plate shall not obstruct the operation of the door lock bar.

14. Equipotential bonding shall be provided for the Door according to the latest edition of Code of Practice for the Electricity (Wiring) Regulations published by Hong Kong SAR Government.

15. The Door shall be covered with thick plastic sheets at the time the substation is handed over and such plastic sheets shall not be removed until the building construction work is completed, in order to avoid staining of the Door caused by splashing of corrosive liquids used on site.

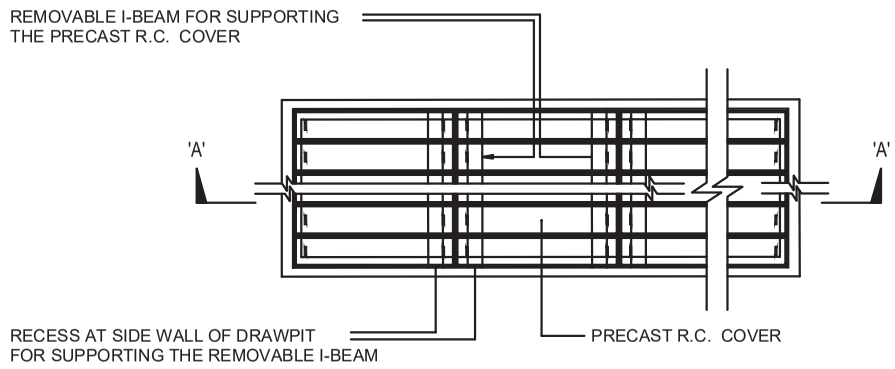

TYPICAL PRECAST R.C. COVER ARRANGEMENT
OF CABLE DRAWPIT OR PREFORMED TRENCH

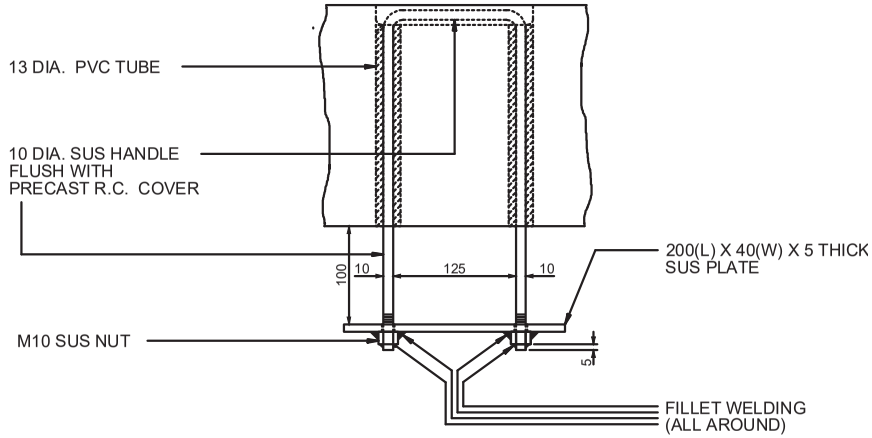

HANDLE FOR PRECAST R.C. COVER

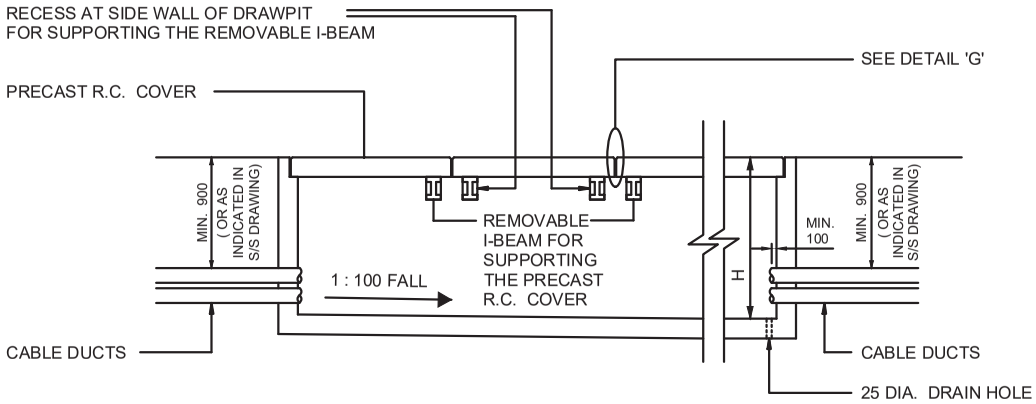

SECTION 'A - 'A'
TYPICAL DETAIL OF PRECAST R.C. COVER
/ I-BEAM FOR DRAWPIT OR PREFORMED TRENCH

HANDLE FOR PRECAST R.C. COVER

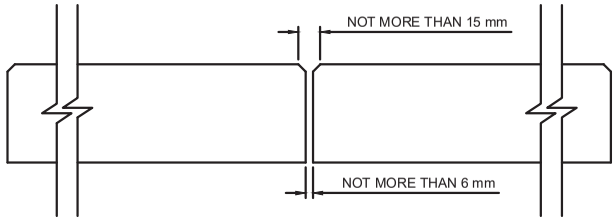

DETAIL 'G'

SUS = STAINLESS STEEL
R.C. = REINFORCED CONCRETE

NOTE :

ALL DIMENSIONS ARE IN mm.

Drg. No. GCS/3/30

REQUIREMENTS OF PRECAST REINFORCED CONCRETE COVER (P722/12/R-1)

Notes for Drawing No. GCS/3/30

1. Each piece of R.C. cover shall be provided with lifting eyes and shall not weigh above 80 kgf.

2. The precast R.C. covers shall be numbered in a sequential order by painting numbers of 50 mm high in white colour on both surfaces of each precast R.C. cover. Drawing showing the layout & numbering shall be displayed in substation.

3. Where the R.C. covers are along the route of transportation of substation equipment, the R.C. covers shall be capable of withstanding an average loading of 20 kPa. Otherwise the R.C. covers shall withstand 10 kPa.

4. Certificate by a registered structural engineer shall be submitted.

5. If H exceeds 1200 mm, SUS CAT ladder in steps of 250 mm shall be provided at a height 800 mm from bottom of drawpit or trench.

6. After HK Electric cables have been laid, the drawpit or trench shall be backfilled with sandbags each not exceeding 25 kgf.

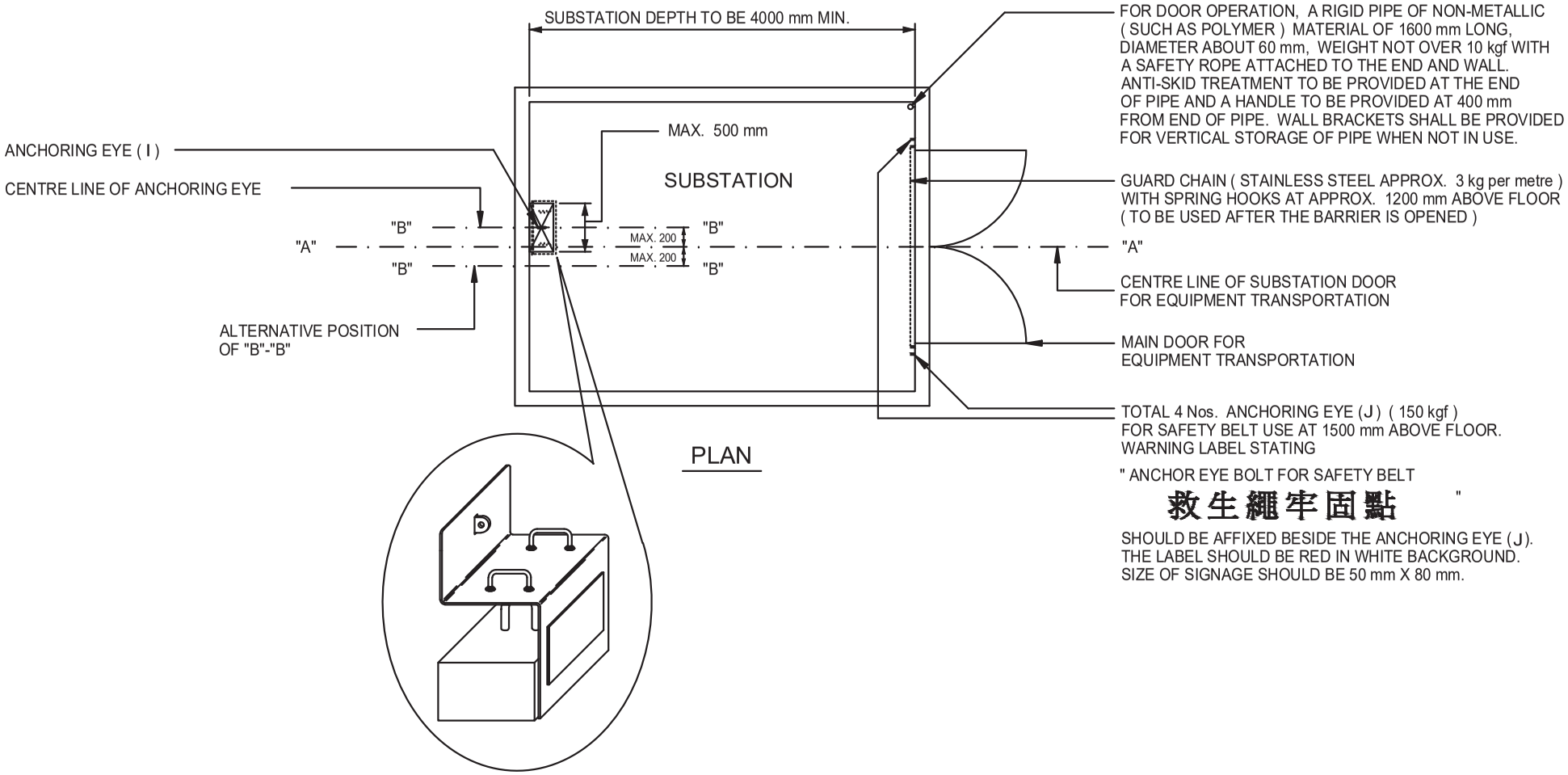

NOTE :

ALL DIMENSIONS ARE IN mm.

Drg. No. GCS/3/31

ANCHORING EYE AND FACILITIES FOR FIRST LEVEL SUBSTATION

(P342/97/R-3) SHEET 1 OF 2

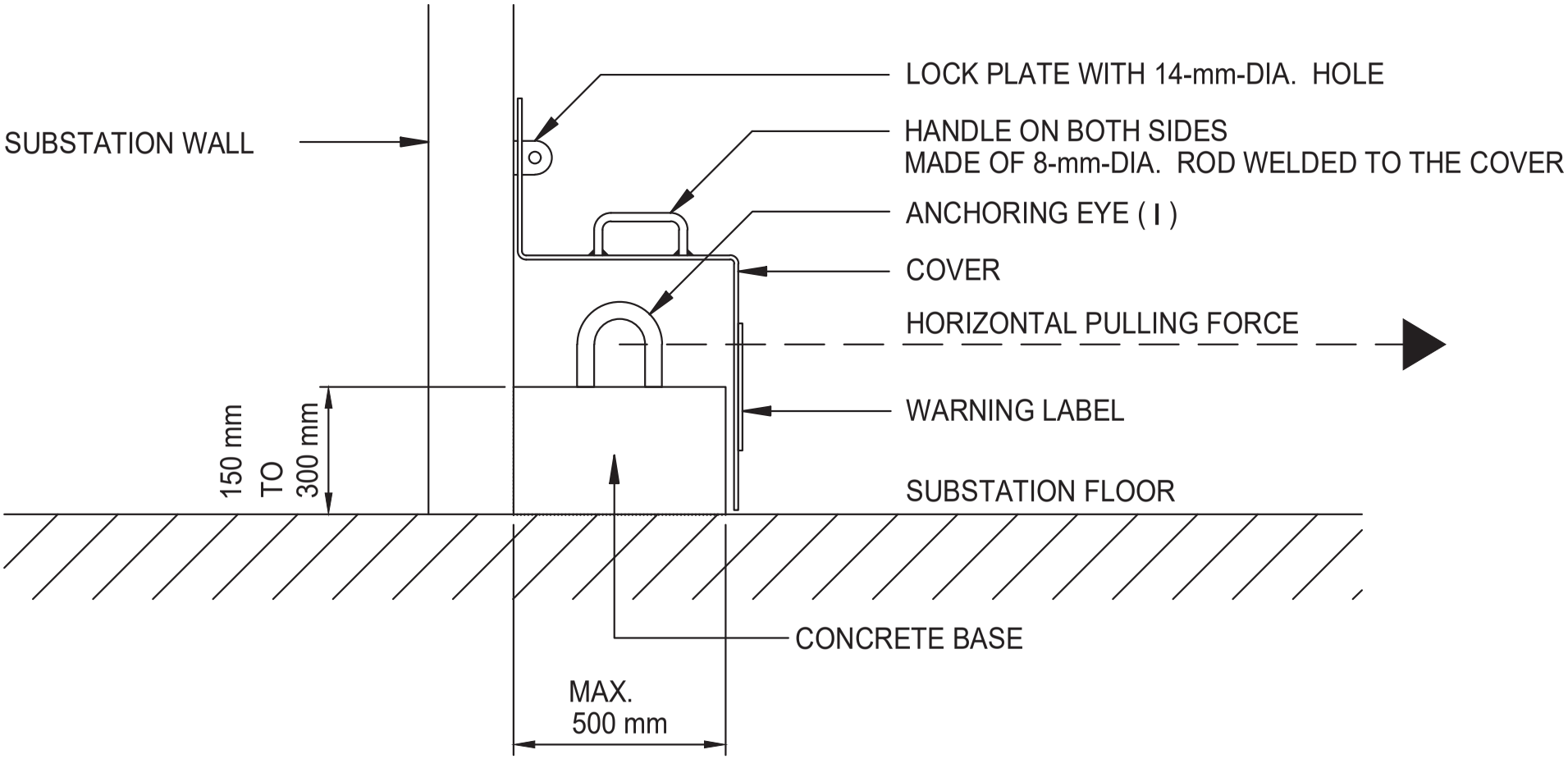

DETAILS OF ANCHORING EYE (I)

NOTE :

ALL DIMENSIONS ARE IN mm.

Drg. No. GCS/3/31

ANCHORING EYE AND FACILITIES FOR FIRST LEVEL SUBSTATION

(P342/97/R-3) SHEET 2 OF 2

Notes for Drawing No. GCS/3/31

1. The anchoring eye (I) will be used for transportation of equipment to and from the substation. A horizontal pulling force in direction along the centre line "A" – "A" will be applied to the anchoring eye (I). The anchoring eye (I) shall be suitable for a "SAFE WORKING LOAD" of 1000 kgf for such application, however the "TESTING LOAD" shall be 2000 kgf.

2. A certificate from a registered professional engineer in accordance with the factories and industrial undertakings ordinance shall be submitted to HK Electric certifying the above "TESTING LOAD" of anchoring eye (I) and the 150-kgf working load of anchoring eye (J).

3. All anchoring eyes shall be made of stainless steel, hot dip galvanised steel or steel with suitable anti-corrosion treatment. A concrete base shall be provided for the anchoring eye (I) to minimize corrosion to the eye due to lodgement of water on floor.

4. A cover with handle (covering the front, the top and the 2 sides) made of stainless steel or hot dip galvanised steel shall be provided to prevent the improper use of the anchoring eye (I). An engraved warning label stating:

   "S.W.L. 1000 kgf DO NOT USE THE ANCHORING EYE BEFORE PROPER TEST 未經測試不可使用"

   shall be bolted on the front of cover. The lettering shall be approximately 15 mm high. A locking plate shall be provided on wall to lock the cover in position. The locking plate shall be suitable for padlocks with an 8 mm diameter shackle and a clear inside width of 20 mm and inside length of 16 mm.

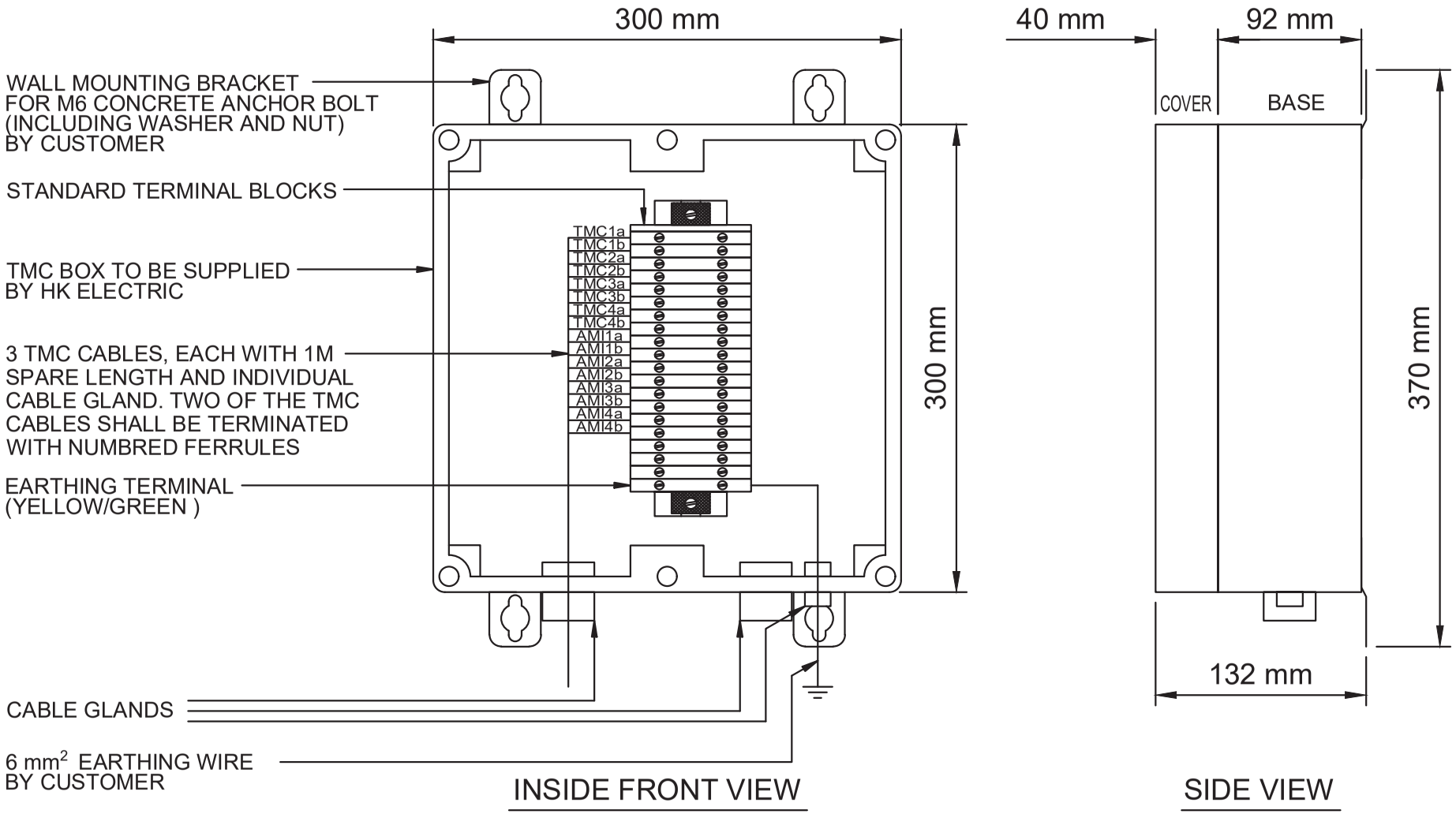

Drg. No. GCS/3/32

ARRANGEMENT FOR TARIFF METER COMMUNICATION (TMC) TERMINATION BOX

(P383/98/R-6) SHEET 1 OF 2

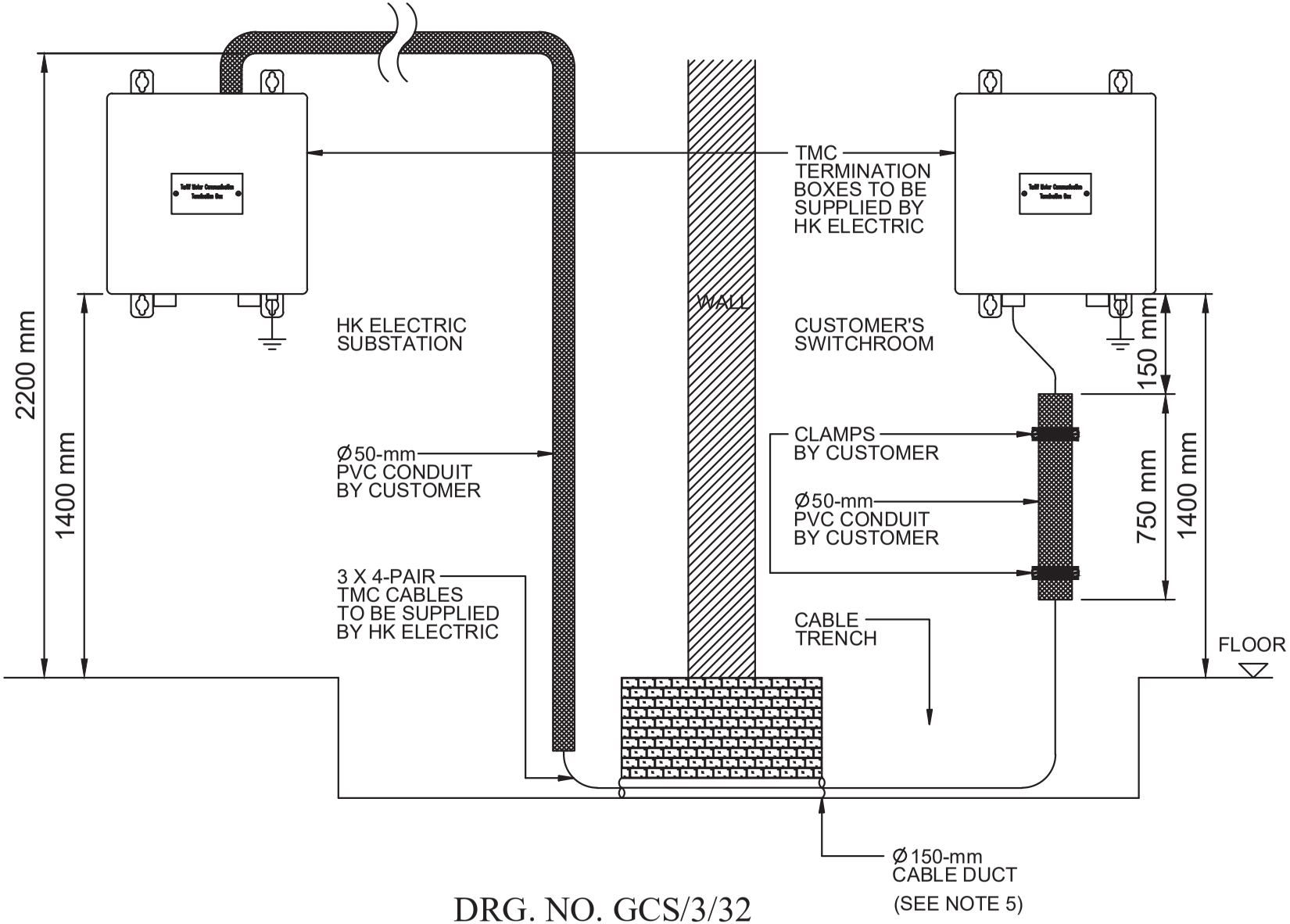

DRG. NO. GCS/3/32

ARRANGEMENT FOR TARIFF METER COMMUNICATION (TMC) TERMINATION BOX (P383/98/R-6) SHEET 2 OF 2

Notes for Drawing No. GCS/3/32

1. 2 Nos. of termination boxes and 3 piece of 4-pair 8-core (1.5 sq. mm stranded conductor) cable to be supplied by HK Electric for Tariff Meter Communication (TMC) purpose shall be collected by customer and installed at site by customer.

   One of the termination boxes shall be at customer's main switchroom and the other termination box shall be at HK Electric substation. Exact position is indicated on the substation layout plan.

   The boxes shall be linked up with the 8-core TMC cables provided by HK Electric. Customer shall complete the cabling including fixing of cable glands and wire terminations before handing over the substation to HK Electric.

2. Each termination box is fully fitted with rail-mounted terminal block comprising 20 Nos. terminals. Two of the TMC cables shall be terminated with numbered ferrules as specific below:

1st TMC Cable	TMC1a & TMC1b for pair 1 white & black cores TMC2a & TMC2b for pair 2 white & black cores TMC3a & TMC3b for pair 3 white & black cores TMC4a & TMC4b for pair 4 white & black cores
2nd TMC Cable	AMI1a & AMI1b for pair 1 white & black cores AMI2a & AMI2b for pair 2 white & black cores AMI3a & AMI3b for pair 3 white & black cores AMI4a & AMI4b for pair 4 white & black cores
3rd TMC Cable	Termination and numbered ferrule are not required

   The two TMC cables shall be terminated on the left hand side & right hand side of terminals for the termination boxes in customer's main switchroom and HK Electric substation respectively. Terminal connection is by means of bare conductor and lugs are not required.

   The TMC cable shall be enclosed in surface mounted 50-mm PVC conduits at customer's main switchroom and HK Electric substation.

   Requirements for installation of 50-mm PVC conduit at HK Electric substation are:

   — Conduit bends should have an internal radius of at least 4 times the outside diameter of the conduit.
   — Conduit shall be supported and fixed to side wall at an interval of not more than 1200 mm. The method of anchoring conduit must be by red-head or similar device.

Notes for Drawing No. GCS/3/32

- Adaptable boxes should be provided immediately after every two bends, or after a bend plus a total maximum straight run of 10 metres or after a maximum straight run of 15 metres.
- The method of carrying out the conduit bends, fixing conduits to boxes, and the tools and materials to be used should be as recommended by the manufacturer of the conduit.

3. Each termination box is fitted with a yellow/green earthing terminal at the end of the terminal block. A 6-sq. mm earthing wire shall be provided and terminated by the customer to the corresponding substation/switch room electrical conduit system.

4. Each box shall be mounted on wall of substation/switch room at 1400 mm above finished floor level.

5. The 150-mm-diameter cable duct shall be properly sealed off with fire resistant material and water-proofed against ingress of water by customer after TMC cable installed.

NOTE : 1. * CUSTOMER MAY SLIGHTLY ADJUST THE ENCLOSURE SIZE TO SUIT THE DIFFERENT TYPE OF CUSTOMER MAIN SWITCH.

2. DOUBLE-LOCK ARRANGEMENT SHOULD BE PROVIDED IF THE ENCLOSURE IS LOCKED-UP BY CUSTOMER.

3. ALL DIMENSIONS ARE IN mm.

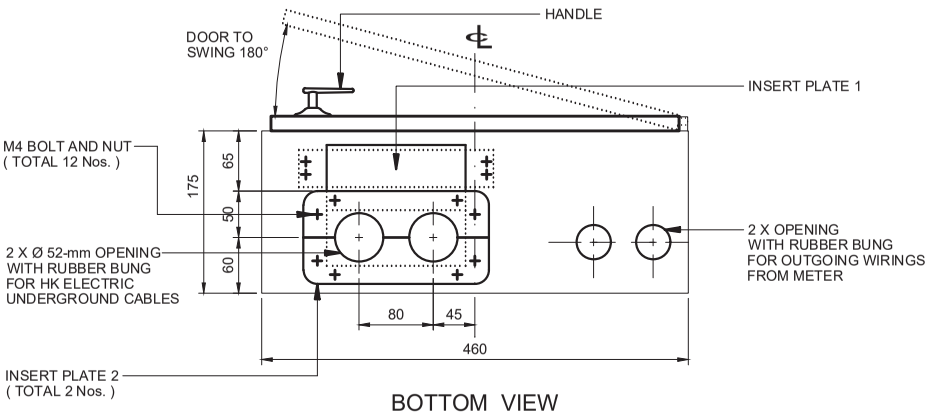

BOTTOM VIEW

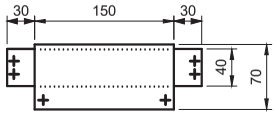

INSERT PLATE 1

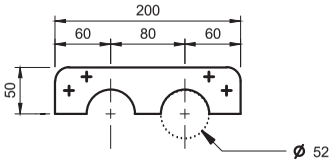

INSERT PLATE 2

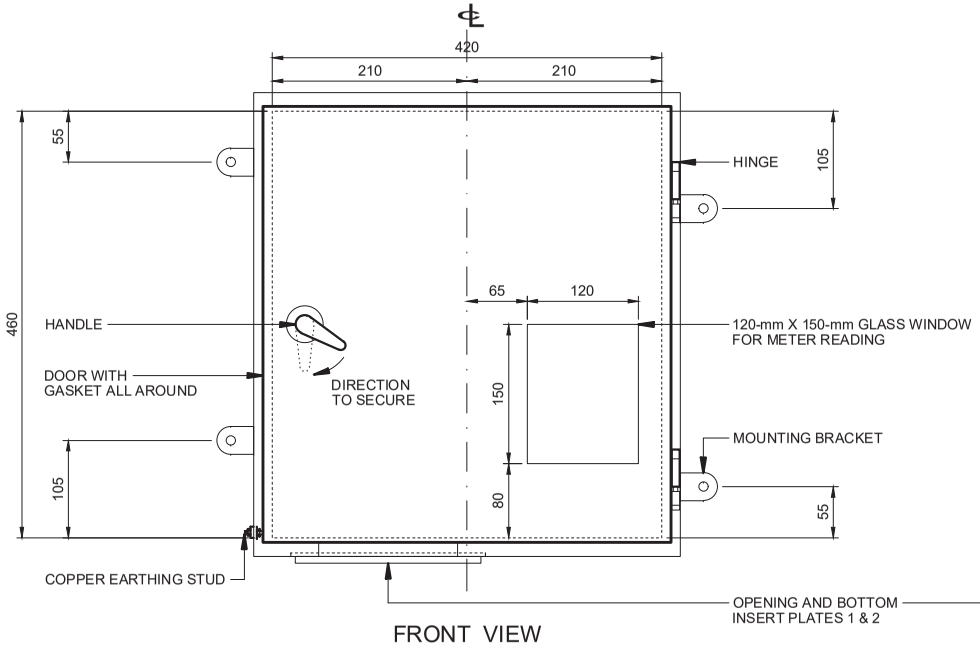

FRONT VIEW

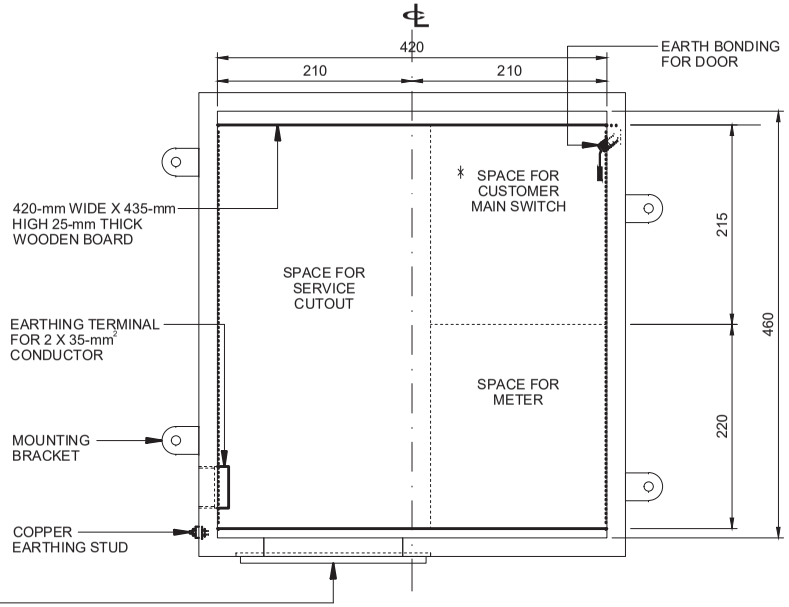

INNER FRONT VIEW

(CUBICLE DOOR OMITTED FOR CLARITY)

Drg. No. GCS/3/33

MILD STEEL WEATHER-PROOF ENCLOSURE FOR SINGLE PHASE SUPPLY (P655/07/R-3)

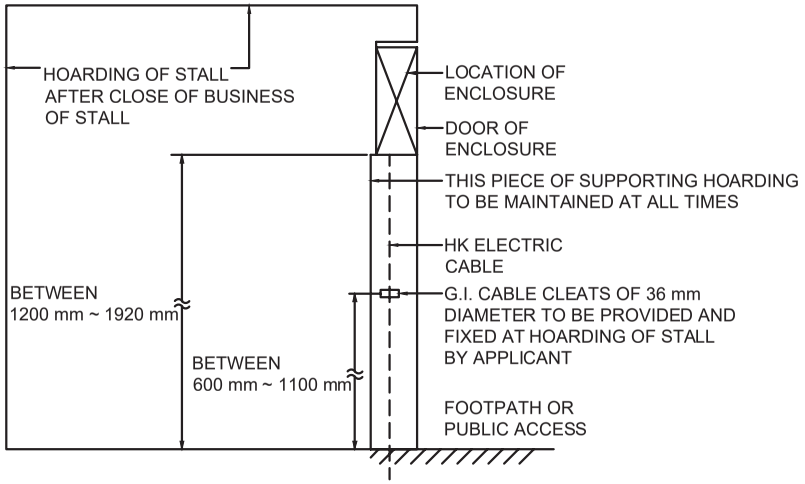

SECTION 'X' - 'X' (OPTION 1)

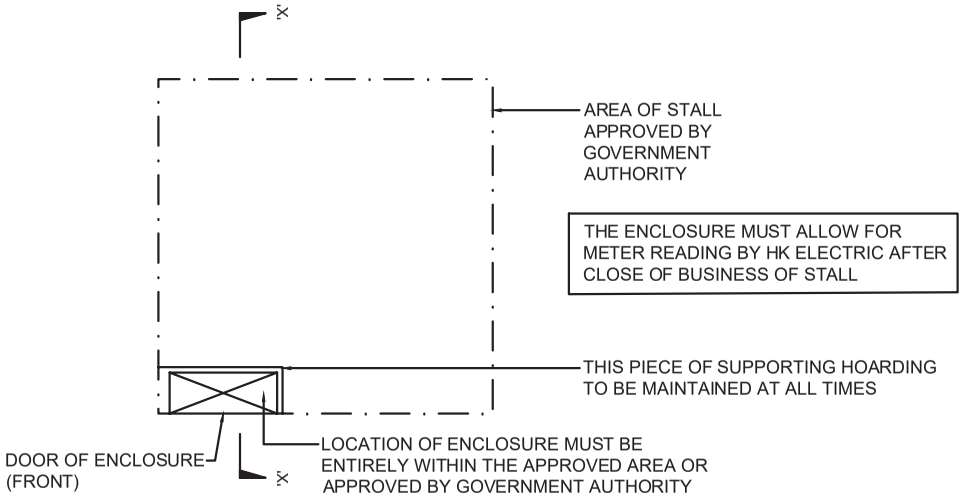

LOCATION PLAN FOR ENCLOSURE (OPTION 1)

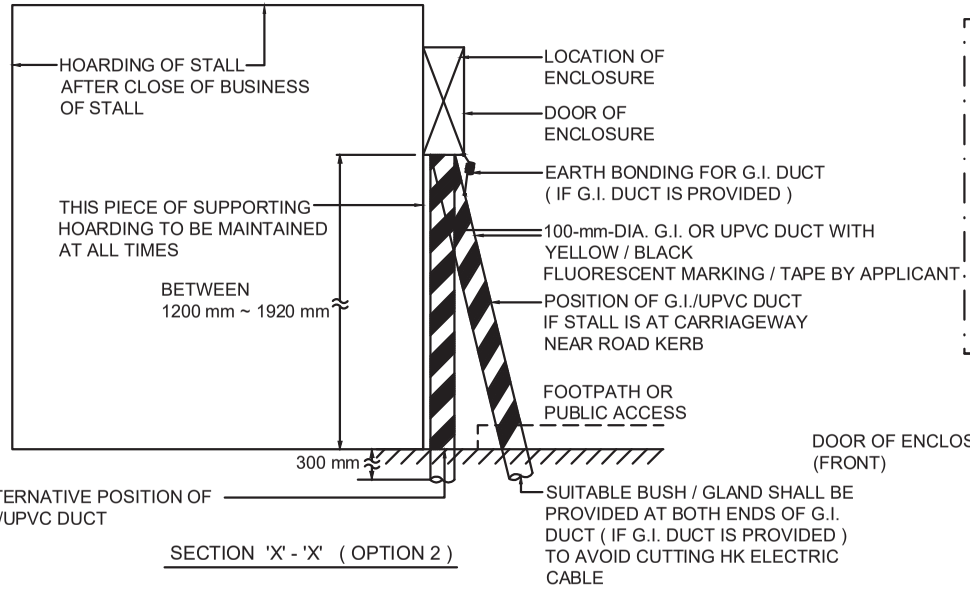

SECTION 'X' - 'X' (OPTION 2)

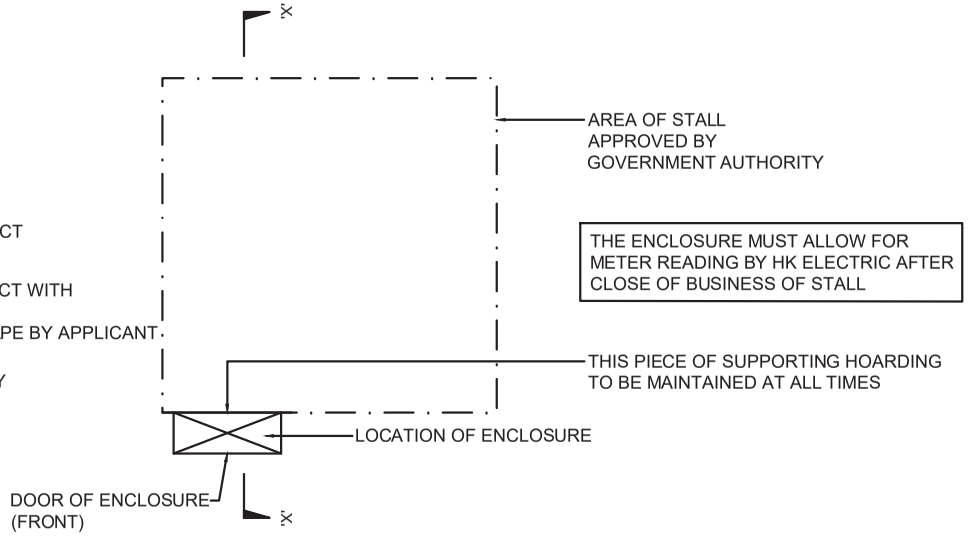

LOCATION PLAN FOR ENCLOSURE (OPTION 2)
(CUSTOMER IS REQUIRED TO ENSURE THAT
THE ENCLOSURE WILL NOT AFFECT PEDESTRIANS,
SHOPS NEARBY AND OTHER CONCERNED PARTIES.)

NOTE : ALL DIMENSIONS ARE IN mm.

Drg. No. GCS/3/34

MILD STEEL WEATHER-PROOF ENCLOSURE FOR SINGLE PHASE SUPPLY TO HAWKER STALL (P717/12/R-3) SHEET 1 OF 2

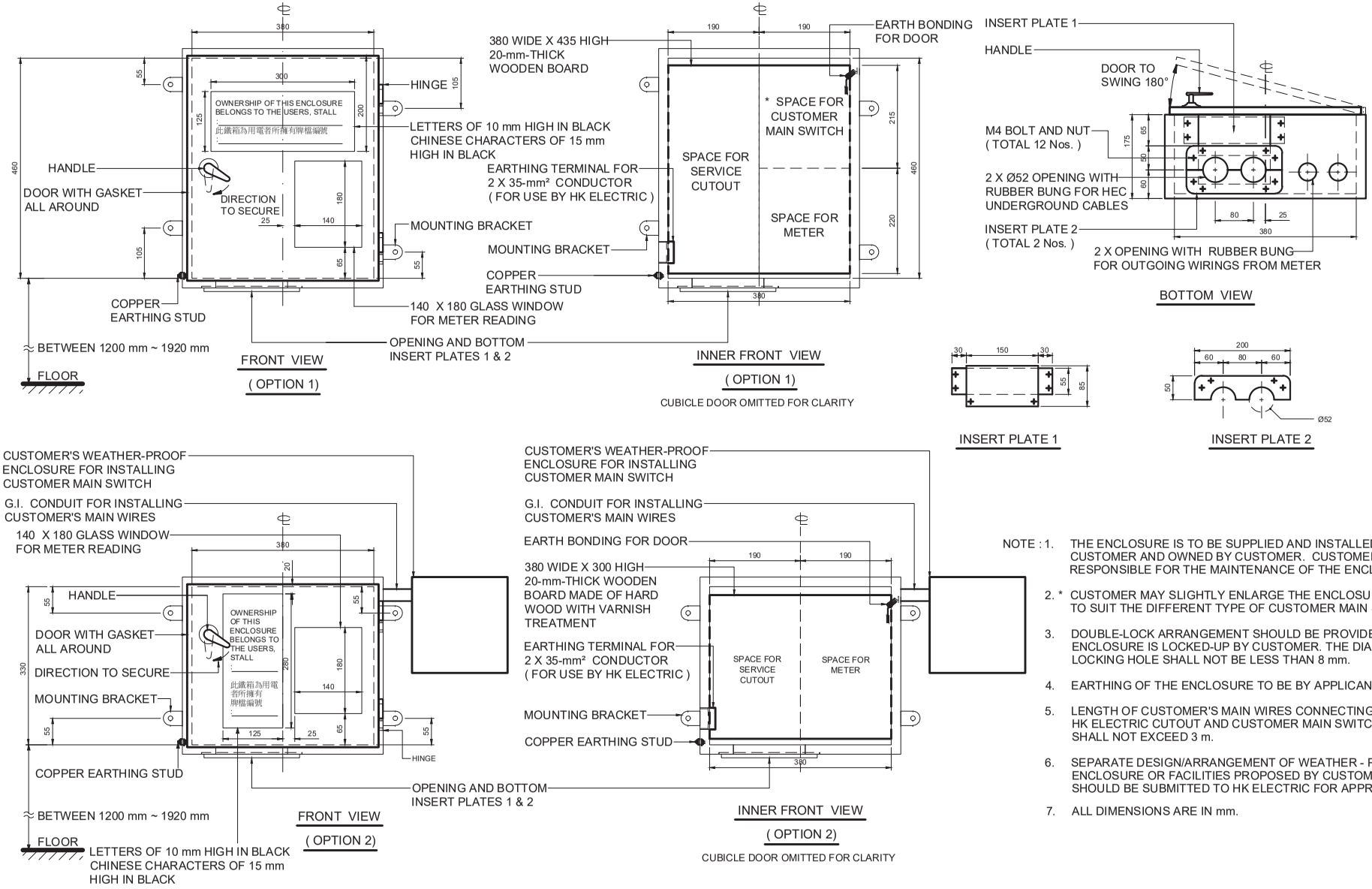

NOTE : 1. THE ENCLOSURE IS TO BE SUPPLIED AND INSTALLED BY CUSTOMER AND OWNED BY CUSTOMER. CUSTOMER IS RESPONSIBLE FOR THE MAINTENANCE OF THE ENCLOSURE.

2. * CUSTOMER MAY SLIGHTLY ENLARGE THE ENCLOSURE SIZE TO SUIT THE DIFFERENT TYPE OF CUSTOMER MAIN SWITCH.

3. DOUBLE-LOCK ARRANGEMENT SHOULD BE PROVIDED IF THE ENCLOSURE IS LOCKED-UP BY CUSTOMER. THE DIAMETER OF LOCKING HOLE SHALL NOT BE LESS THAN 8 mm.

4. EARTHING OF THE ENCLOSURE TO BE BY APPLICANT.

5. LENGTH OF CUSTOMER'S MAIN WIRES CONNECTING HK ELECTRIC CUTOUT AND CUSTOMER MAIN SWITCH SHALL NOT EXCEED 3 m.

6. SEPARATE DESIGN/ARRANGEMENT OF WEATHER - PROOF ENCLOSURE OR FACILITIES PROPOSED BY CUSTOMER SHOULD BE SUBMITTED TO HK ELECTRIC FOR APPROVAL.

7. ALL DIMENSIONS ARE IN mm.

Drg. No. GCS/3/34

MILD STEEL WEATHER-PROOF ENCLOSURE FOR SINGLE PHASE SUPPLY TO HAWKER STALL (P717/12/R-3) SHEET 2 OF 2

CHAPTER 4

PROTECTION REQUIREMENTS

CHAPTER 4

PROTECTION REQUIREMENTS

4.1 General

Means of protection for automatic disconnection against phase and earth faults shall be provided on the customer main switch. The type and settings of protective devices shall be so selected that they can grade properly with HK Electric infeed protection.

The customer shall provide Time-Current curve showing that the proposed protection scheme for the main switch can grade properly with HK Electric system under both phase fault and earth fault conditions.

4.2 Customer HV Main Switch

1. Anticipated maximum 11-kV fault level:

   Phase fault: 18.4 kA (350 MVA)
   Earth fault: 2.0 kA

   To grade with HK Electric 11-kV feeder protection, the protective relays of customer 11-kV main switch shall have an operating time not exceeding the maximum allowable time-current curves for phase fault and earth fault as shown in Drg. Nos. GCS/4/01 and GCS/4/02 respectively.

2. Anticipated maximum 22-kV fault level:

   Phase fault: 25 kA (952 MVA)
   Earth fault: 2.5 kA

   To grade with HK Electric 22-kV feeder protection, the protective relays of customer 22-kV main switch shall have an operating time not exceeding the maximum allowable time-current curves for phase fault and earth fault as shown in Drg. Nos. GCS/4/03 and GCS/4/04 respectively.

3. Protection C.T.s shall have adequate output to prevent C.T. saturation. The customer shall provide document/calculation sheet to show that the proposed C.T.s have adequate output for the application under both phase and earth fault conditions.

4.3 Customer LV Main Switch

1. The anticipated maximum LV (380 V) fault level is 40 kA (26 MVA). The overcurrent protection of customer LV main switch shall grade with HK Electric transformer overcurrent protection and has an operating time not exceeding the maximum allowable time-current curves for various ratings of LV main switches as shown in Drg. No. GCS/4/05.

2. The customer's protective devices shall be set so that disconnection is achieved within 5 seconds during an earth fault.

3. Bonding Between HK Electric and Customer's Earthing Systems

   a. Under the current regulations, the customer's earthing system shall be bonded to that of the HK Electric earthing system for transformer supplies. This will cause a significant increase in LV earth fault current, the magnitude of which can be as high as phase fault current.

   b. If the customer's LV overcurrent and earth fault protections share the same set of C.T.s, high output C.T.s and low burden type earth fault relay shall be used to prevent C.T. saturation. The customer shall provide document/calculation sheet to show that the proposed protection C.T.s have adequate output for the application under earth fault condition.

   c. As an alternative to the use of high output C.T.s and low burden type earth fault relay, separate sets of C.T.s can be used for overcurrent and earth fault protections as shown in Drg. No. GCS/4/06.

4.4 Protection Scheme For Main Switch

The customer is advised to provide a summary sheet as shown in Drg. No. GCS/4/07 and GCS/4/08 for LV and HV main switch protection scheme respectively to HK Electric for consideration.

4.5 Auxiliary Supply for Protection Scheme and Relay

If the customer's protection scheme or relay requires an auxiliary supply, the auxiliary supply shall be reliable and not be interrupted during LV or HV faults on the customer's equipment to ensure that the customer's protection scheme and relay perform the protection function properly.

4.6 Typical Protection Scheme for LV Main Switch Directly Fed by HK Electric Transformer

We provide some typical protection schemes for low voltage main switch directly fed by transformer on our website. REWs may make reference to the typical protection schemes for preparation of their electrical installation in order to speed up the provision of electricity supply.

To get the information on typical protection schemes, please visit our website:

https://www.hkelectric.com/en/customer-services/contractors-work-corner

4.7 Schedule of Drawings - Protection Requirements

Drawing No.	Drawing Title
GCS/4/01	Maximum Allowable Time-Current Curve of Overcurrent Protection at Customer 11-kV Main Switch
GCS/4/02	Maximum Allowable Time-Current Curve of Earth Fault Protection at Customer 11-kV Main Switch
GCS/4/03	Maximum Allowable Time-Current Curve of Overcurrent Protection at Customer 22-kV Main Switch
GCS/4/04	Maximum Allowable Time-Current Curve of Earth Fault Protection at Customer 22-kV Main Switch
GCS/4/05	Maximum Allowable Time-Current Curves of Overcurrent Protection at Customer LV Main Switch
GCS/4/06	Recommended C.T. Arrangement for Customer's Protective Device at LV Main Switch
GCS/4/07	LV Main Switch Protection Scheme Summary Sheet
GCS/4/08	HV Main Switch Protection Scheme Summary Sheet

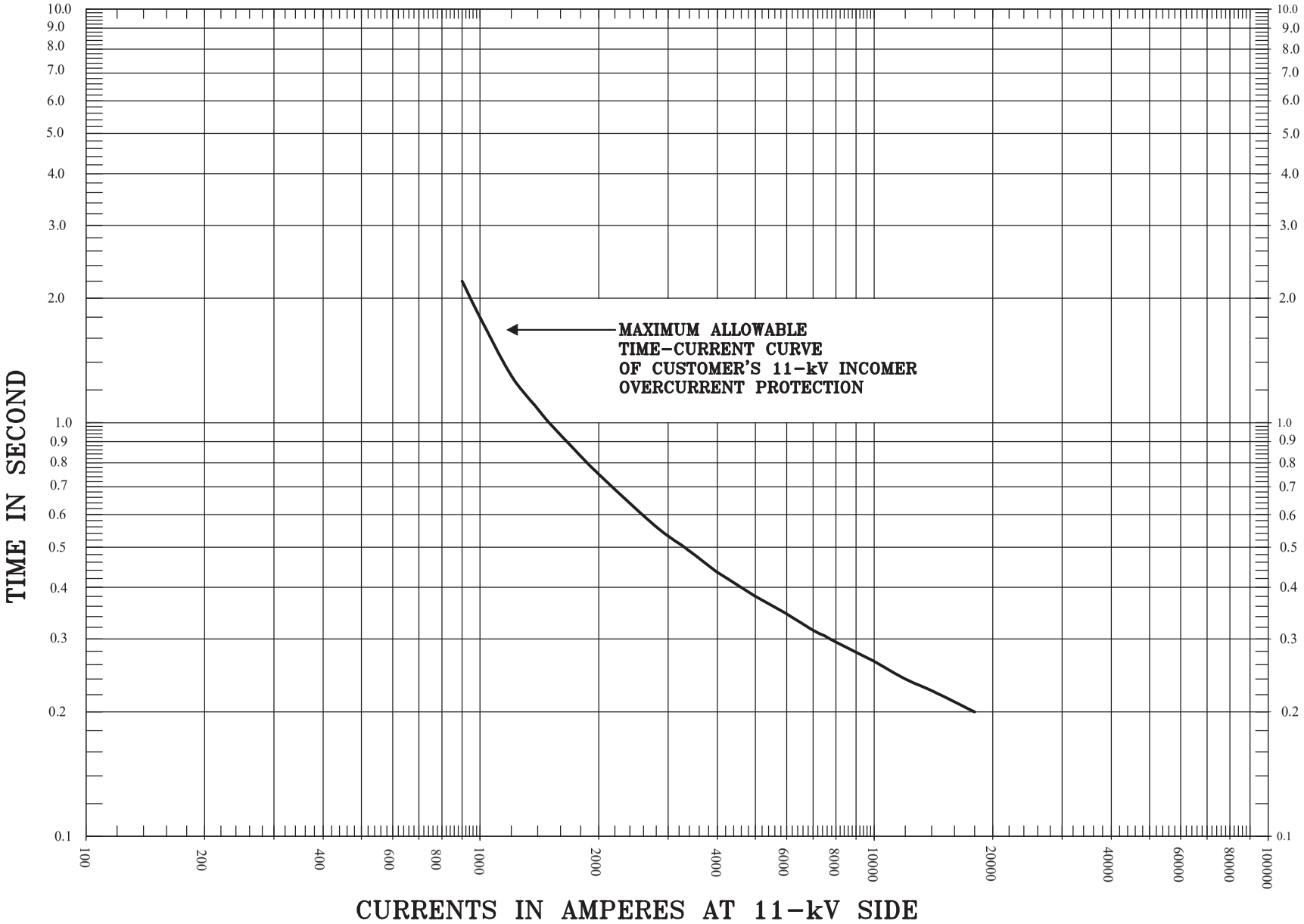

Drg. No. GCS/4/01

MAXIMUM ALLOWABLE TIME-CURRENT CURVE OF OVERCURRENT PROTECTION AT CUSTOMER 11-kV MAIN SWITCH

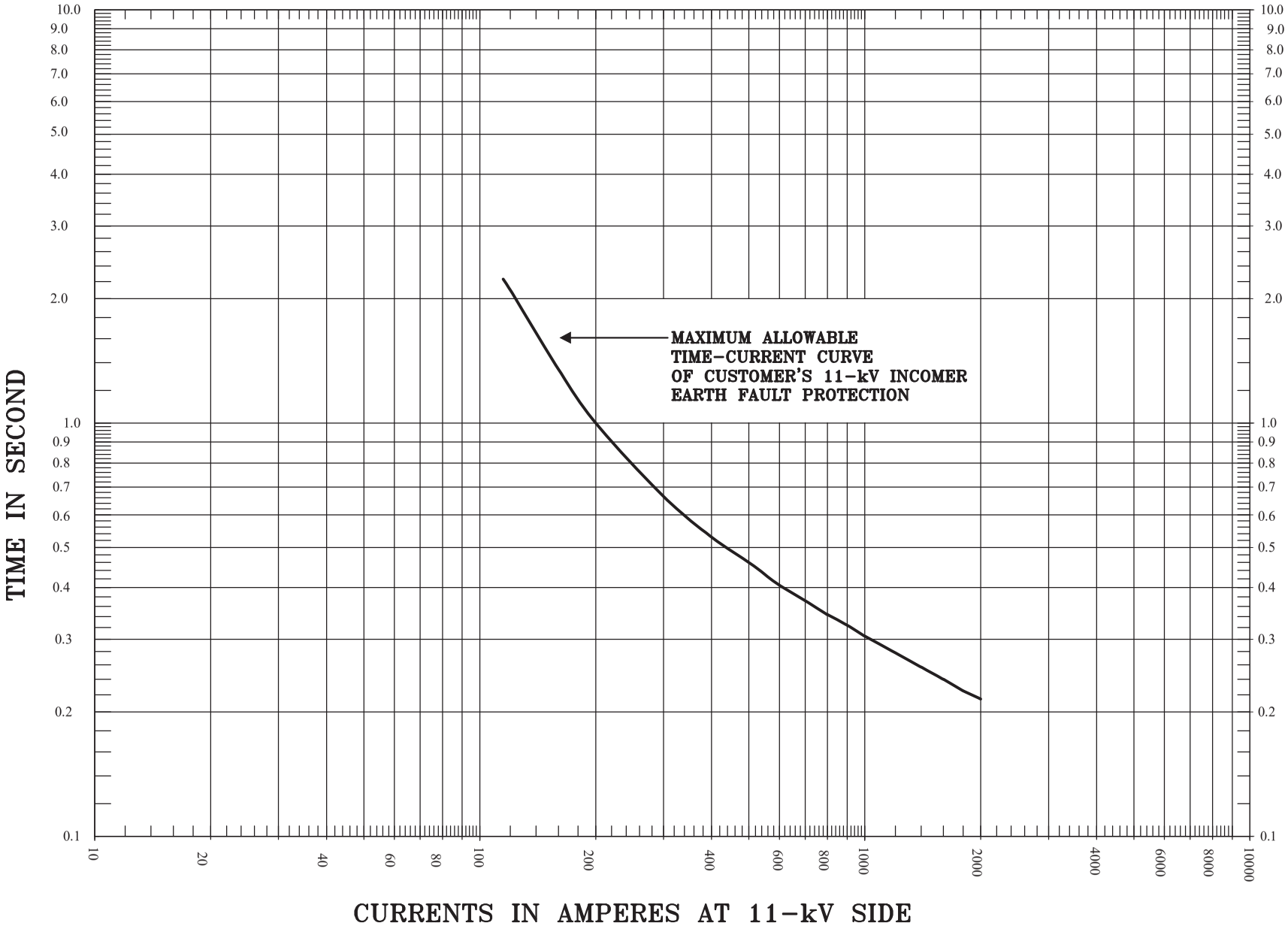

Drg. No. GCS/4/02

MAXIMUM ALLOWABLE TIME-CURRENT CURVE OF EARTH FAULT PROTECTION AT CUSTOMER 11-kV MAIN SWITCH

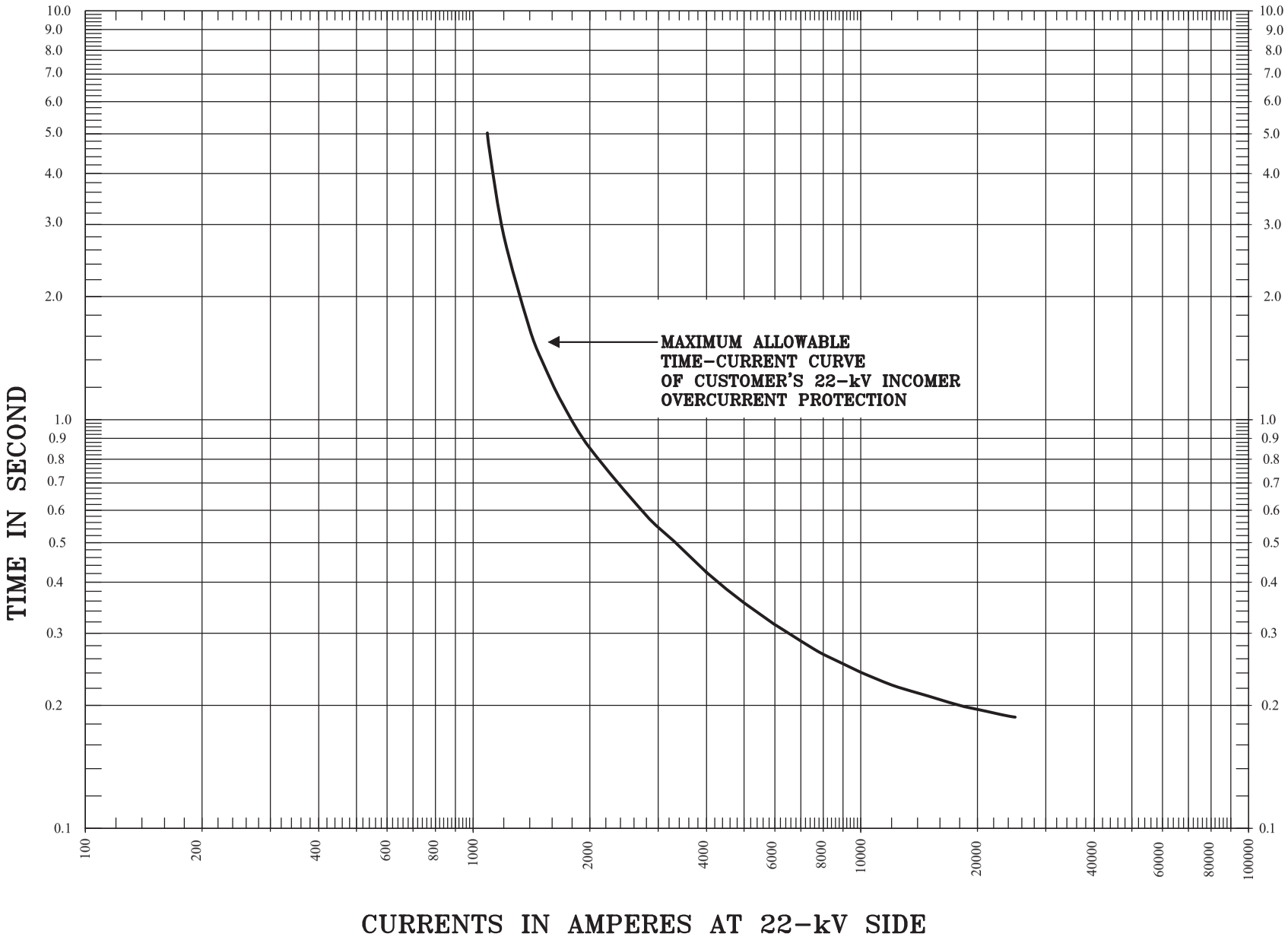

Drg. No. GCS/4/03

MAXIMUM ALLOWABLE TIME-CURRENT CURVE OF OVERCURRENT PROTECTION AT CUSTOMER 22-kV MAIN SWITCH

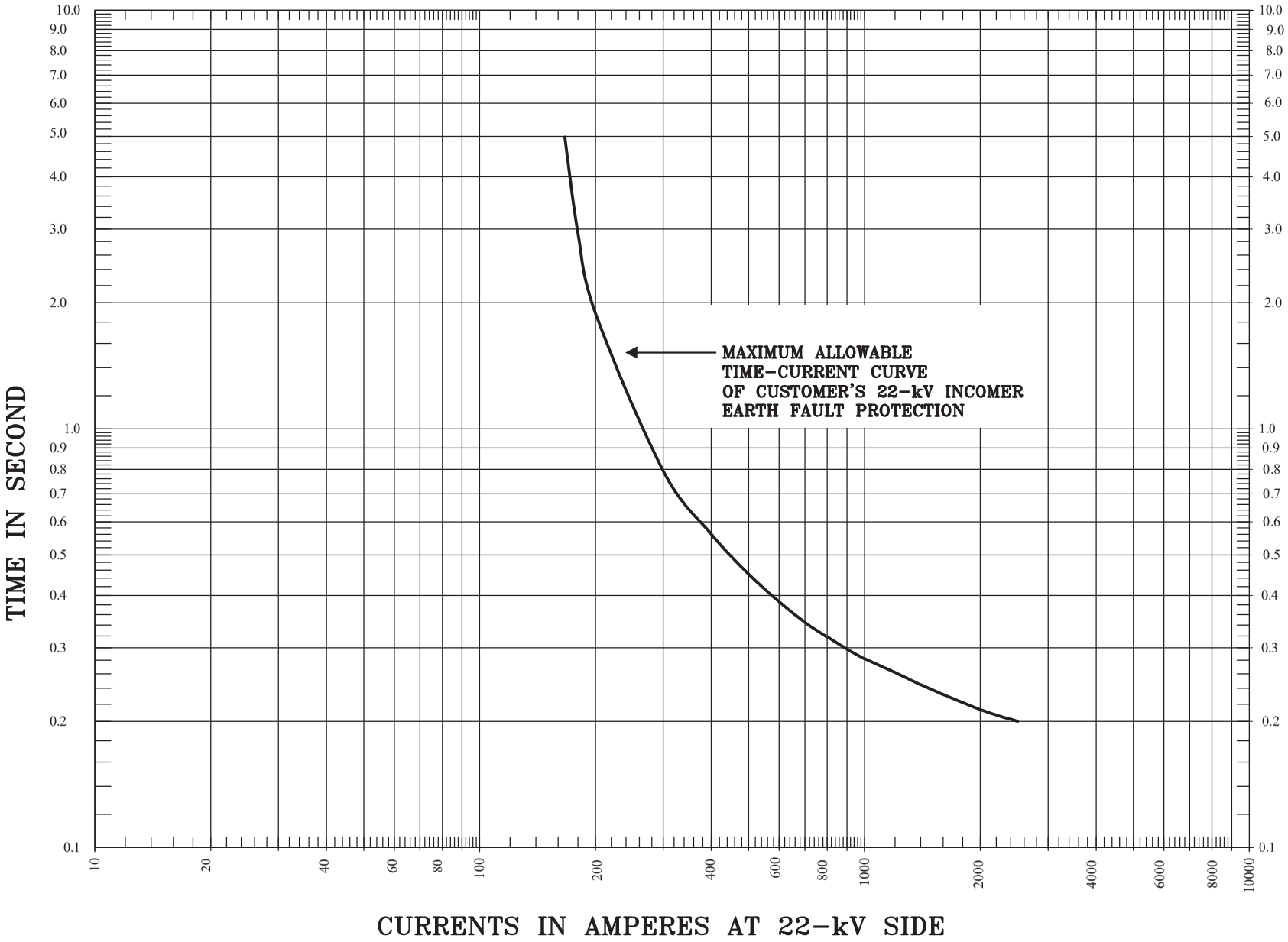

Drg. No. GCS/4/04

MAXIMUM ALLOWABLE TIME-CURRENT CURVE OF EARTH FAULT PROTECTION AT CUSTOMER 22-kV MAIN SWITCH

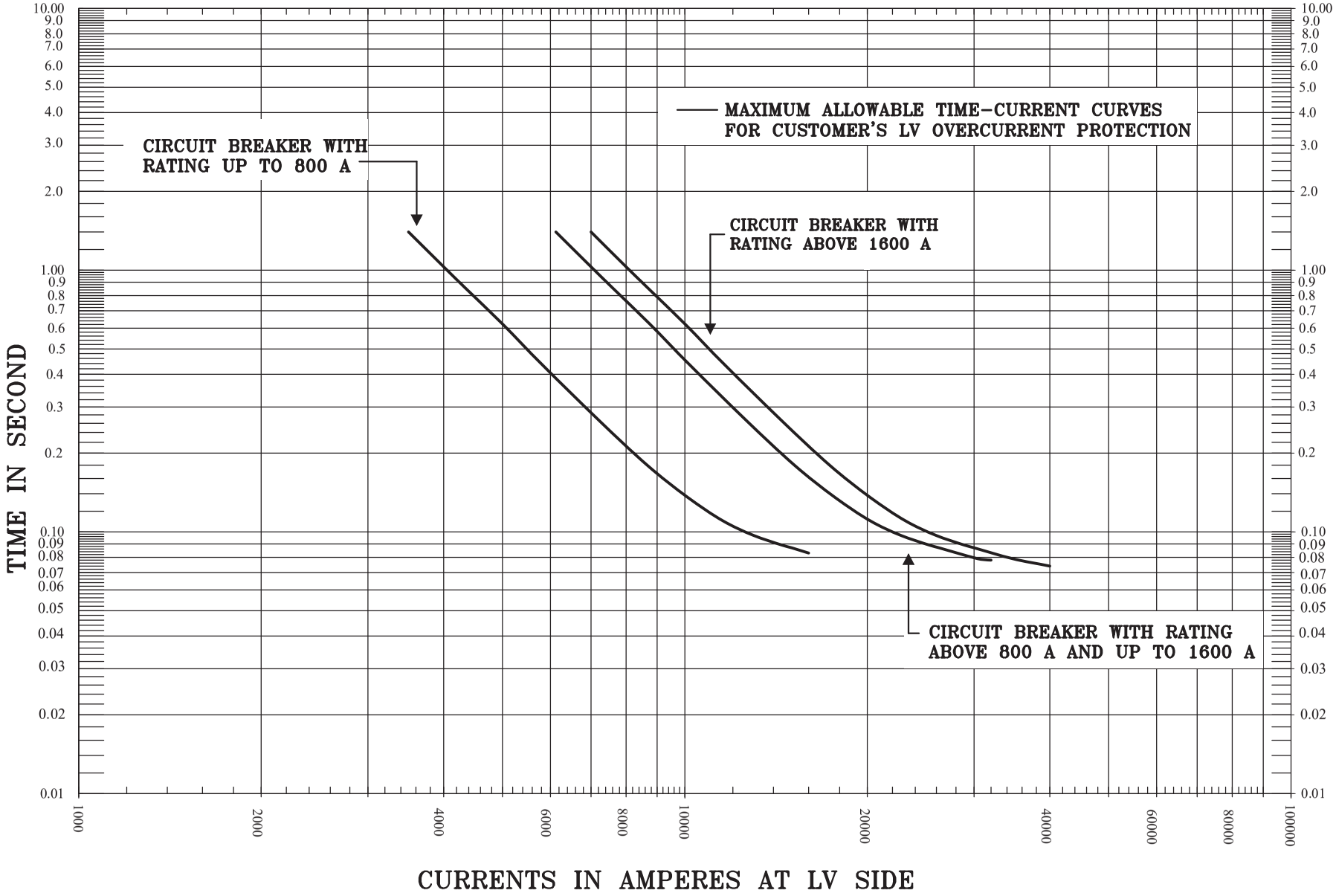

Drg. No. GCS/4/05

MAXIMUM ALLOWABLE TIME-CURRENT CURVES OF OVERCURRENT PROTECTION AT CUSTOMER LV MAIN SWITCH

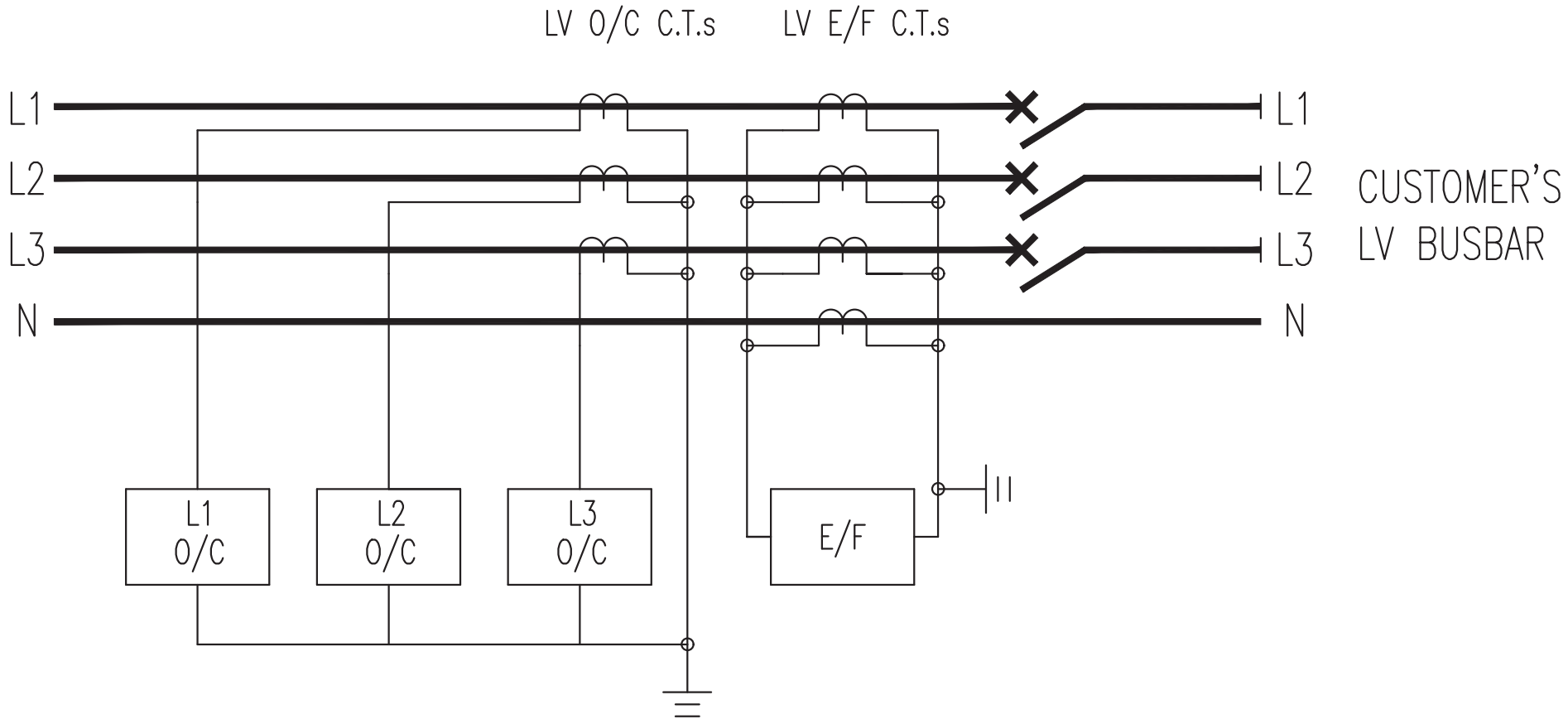

Drg. No. GCS/4/06

RECOMMENDED C.T. ARRANGEMENT FOR CUSTOMER'S PROTECTIVE DEVICE AT LV MAIN SWITCH

1. Circuit Breaker Information : (Main Switch No. : _____)

Main Switch Rating	Any Built-in Protective Device ?	Instantaneous Trip Current Setting (kA) and Max. Setting Error	Setting Details
	☐ Yes ☐ No		

2. Current Transformer :

Function	Make	Model Number	Ratio	VA and Class	Any C.T. Magnetisation Curve Provided to HK Electric ?	C.T. Resistance (ohm)	Connection Lead Resistance (ohm)
Overcurrent Protection C.T.					☐ Yes ☐ No, to be submitted later		
Earth Fault Protection C.T.					☐ Yes ☐ No, to be submitted later		
Will the overcurrent protection and earth fault protection share the same set of C.T.s ? ☐ Yes ☐ No							

3. Relay Information :

Function	Make	Model Number	Rated Current (A)	Burden at Rated Current (VA)	Auxiliary Supply# (A.C., D.C. or N.A.)	* Characteristics e.g. EI, VI, NI (1.3 s), NI (3 s)	Plug Setting Range	Plug Setting	Time Multiplier Setting	Relay Impedance at Plug Setting (ohm)
Overcurrent Relay										
Earth Fault Relay										

(* : EI = Extremely Inverse, VI = Very Inverse, NI= Normal Inverse)

If the customer protection scheme or relay requires an auxiliary supply, the auxiliary supply shall be reliable and not be interrupted during LV or HV faults on the customer equipment to ensure that the customer protection scheme and relay perform the protection function properly.

4. Maximum Earth Fault Loop Impedance, if available at the time of submission : _____ ohm

Notes : Following information shall be provided :

1. Catalogues for main switch (with details of built-in protective device, if any), C.T.s (including C.T. magnetisation curve) and relays.
2. A.C. connection diagram of overcurrent and earth fault protection for the main switch.
3. Calculation sheet showing that the proposed C.T.s have adequate output for the application under both phase and earth fault conditions.
4. Time-current characteristic curve of overcurrent protection at the proposed settings plotted at the Drg. No. GCS/4/05.

Drg. No. GCS/4/07

LV MAIN SWITCH PROTECTION SCHEME SUMMARY SHEET

1. Circuit Breaker Information : (Main Switch No. : _____)

Main Switch Rating	Any Built-in Protective Device ?	Instantaneous Trip Current Setting (kA) and Max. Setting Error	Setting Details
	☐ Yes ☐ No		

2. Current Transformer :

Function	Make	Model Number	Ratio	VA and Class	Any C.T. Magnetisation Curve Provided to HK Electric ?	C.T. Resistance (ohm)	Connection Lead Resistance (ohm)
Overcurrent Protection C.T.					☐ Yes ☐ No, to be submitted later		
Earth Fault Protection C.T.					☐ Yes ☐ No, to be submitted later		
Will the overcurrent protection and earth fault protection share the same set of C.T.s ? ☐ Yes ☐ No							

3. Relay Information :

Function	Make	Model Number	Rated Current (A)	Burden at Rated Current (VA)	Auxiliary Supply# (A.C., D.C. or N.A.)	* Characteristics e.g. EI, VI, NI (1.3 s), NI (3 s)	Plug Setting Range	Plug Setting	Time Multiplier Setting	Relay Impedance at Plug Setting (ohm)
Overcurrent Relay										
Earth Fault Relay										

(* : EI = Extremely Inverse, VI = Very Inverse, NI= Normal Inverse)

If the customer protection scheme or relay requires an auxiliary supply, the auxiliary supply shall be reliable and not be interrupted during LV or HV faults on the customer equipment to ensure that the customer protection scheme and relay perform the protection function properly.

Notes : Following information shall be provided :

1. Catalogues for main switch (with details of built-in protective device, if any), C.T.s (including C.T. magnetisation curve) and relays.
2. A.C. connection diagram of overcurrent and earth fault protection for the main switch.
3. Calculation sheet showing that the proposed C.T.s have adequate output for the application under both phase and earth fault conditions.
4. Time-current characteristic curves of overcurrent protection and earth fault protection at the proposed settings plotted at the Drg. No. GCS/4/01 & GCS/4/02 (for 11-kV main switch) or Drg. No. GCS/4/03 & GCS/4/04 (for 22-kV main switch) respectively.

Drg. No. GCS/4/08

HV MAIN SWITCH PROTECTION SCHEME SUMMARY SHEET

CHAPTER 5

METERING REQUIREMENTS

CHAPTER 5

METERING REQUIREMENTS

5.1 General

1. All installations connected to, or intended to be connected to HK Electric supply of electricity must comply with HK Electric Supply Rules, the latest edition of Code of Practice for the Electricity (Wiring) Regulations and other relevant Government Ordinances and Regulations.

2. Tariff metering equipment are important to HK Electric and customers in the determination of electricity consumption. Tariff meters shall be installed in a clean and dry indoor location which is not exposed to weather, mechanical damage, vibrations, extremes of temperature or dampness, etc. They shall be under conditions which are suitable for meter installation, reading and maintenance and shall comply with requirements listed below.

5.2 Interference on Meter Seals

Meter seals shall not be removed or tampered with by customer/REC/REW. A fixed charge shall be levied on unauthorised interference. However, if rewiring of customer's installation requires removal of the seals, prior consultation with HK Electric shall be made.

5.3 Type of Meters to be Installed

1. For 11-kV/22-kV installation, transformer operated meter shall be installed.

2. For 3-phase 4-wire LV installation with main switch rating exceeding 100 A, C.T. operated meter shall be installed.

3. For 3-phase 4-wire LV installation with main switch rating of 100 A and below, whole current (direct connected) type meter shall be installed.

4. For single-phase LV installation, whole current (direct connected) type meter shall be installed.

5.4 Metering Position

1. HK Electric 11-kV/22-kV current transformers and voltage transformers shall be installed in HK Electric substation and HK Electric meter shall be installed inside the customer’s switchroom. Details of the arrangement are shown in Drg. Nos. GCS/5/01 and GCS/5/02.

2. HK Electric LV meter shall be electrically connected at a position immediately after the customer main switch.

3. Meter position shall satisfy the requirements for meter reading, meter fixing and meter maintenance.

4. The metering point of an installation shall be at a position as close to the origin of the supply source as practicable.

5.5 General Requirements for Installation

1. Requirements for meter boards

   a. Meter board must be provided by the customer for installation of meters and accessories. Meter board should preferably be of hard wood with varnish treatment and at least 12 mm thick, and the distance between the surface of meter board and wall surface shall not be less than 25 mm.

   b. Fixing height of meter board (measured from the top of meter board to finished floor level) shall be as follows:

Meter Room/Switchboard	**Public Area**
Max. 2.25 m	Max. 2.25 m
Min. 0.90 m	Min. 2.15 m

   c. Flat numbering shall be from left to right, top to bottom in ascending order and be uniform throughout the building.

   d. A permanent, tidy and securely fixed flat/address label shall be provided at the conspicuous space of each meter position.

   e. If holes are provided on meter boards for tariff meter leads and meter tails to terminate onto a meter, there shall be two holes per tariff meter, left for incoming and right for customer's main cables.

   f. For non-residential customers, meter board dimensions shall be based on three-phase meters of appropriate type.

   g. Meter boards and its clearance for more than one meter shall be of dimensions in multiples of unit per Drg. No. GCS/5/14.

h. Meter board arrangements shall comply with Drg. Nos. GCS/5/15, GCS/5/16 and GCS/5/17 as appropriate.

2. Requirements for meter ducts/rooms

a. Space requirements for meter duct/room shall comply with Drg. No. GCS/05/18.

b. If meters are installed inside a meter duct with no free working space inside, the distance between meter surface and the hinged door of the meter duct at closed position shall be maximum 600 mm and minimum 200 mm.

c. Minimum working space in front of the meter is 900 mm. Minimum 70 mm clearance is required by the side of the meter.

d. In a multi-customer building, meter ducts/rooms shall be located at public area.

e. Meter duct/room shall be properly labelled, easily accessible and be provided with locks. A master key exclusively for the use of all the meter duct/room locks shall be available at the Management Office to facilitate monthly meter reading. This master key shall not be able to open other locks.

f. Adequate lighting shall be provided inside the meter ducts/rooms.

5.6 General Requirements of LV Tariff Meters

1. Space requirement for tariff meters shall comply with Drg. No. GCS/5/14.

2. For main switch rating exceeding 100 A three-phase and up to 400 A three-phase, HK Electric will provide a C.T. cum link box free of charge. The dimensions of the box are 305 mm x 375 mm x 175 mm (H x W x D). The working space in front of the box is 900 mm and the minimum clearance at the two sides of the box shall be 100 mm for sealing work.

3. For main switch rating exceeding 400 A three-phase, the C.T. chamber as per Drg. No. GCS/5/19 is required to be fitted into the switchboard cubicle.

4. C.T. operated meters shall be wired according to Drg. No. GCS/5/21. Termination of multi-core cable at C.T.s and meter will be done by HK Electric.

5. Voltage wires of length around 500 mm should be prepared using the 12-core 4-mm^2 cable provided by HK Electric. Wires with core number 7, 8, 9 and 10 should be connected to L1, L2, L3 and N respectively at the P2 (loading) side of corresponding measurement C.T. All exposed conductor of the voltage wires and customer's main wires should be properly insulated by mastic tapes, covered with the correct colour coded tapes for phase identification.

6. For new installation of C.T. operated meters with a main switch rating of 600 A or above, located inside the customer's switchboard, a Cat. 5e cable shall be supplied and installed by the customer with mechanical protection from the meter to the Tariff Meter Communication (TMC) Termination Box in the customer's switchroom. Each end of the mechanical protection shall be terminated with a junction box inside which there should be at least 1-metre spare length of the Cat. 5e cable. The junction boxes shall be within 0.5 metres of the meter and the TMC Termination Box. This requirement should also apply for refurbishments of customer's switchboards that contain C.T. operated meters with main switch rating of 600 A or above.

7. Where applicable, HK Electric shall provide the following LV metering equipment free of charge:

   - C.T. cum link box.

   - 12-core cable connecting C.T. terminals and tariff meter terminals. The maximum length is 10 metres.

   - Cable gland for 12-core cable.

   - HRC fuse link carriers and bases.

   - Tariff metering C.T.s.

   REC/REW shall make advance appointment with us at 2887 3455 to collect the above metering equipment from the Customer Centre on 9/F., Electric Centre, 28 City Garden Road, North Point, Hong Kong and install them properly before meter fixing.

8. For existing buildings, if the tariff meters are installed inside a meter cubicle/enclosure, the meter cubicle/enclosure shall comply with the requirements as shown in Detail 'A' of Drg. No. GCS/5/22. Under special circumstances, HK Electric may accept the meter cubicle/enclosure which complies with the requirements as shown in Detail 'B' of Drg. No. GCS/5/22.

5.7 Special Requirements for 11-kV/22-kV Metering Scheme

1. HK Electric shall provide the following 11-kV/22-kV metering equipment free of charge:

   - 12-core cable for connection between V.T.s/C.T.s terminals and tariff meter terminals.

   - Cable gland for 12-core cable.

   REC/REW shall make advance appointment with us at 2887 3455 to collect the above metering equipment from the Customer Centre on 9/F., Electric Centre, 28 City Garden Road, North Point, Hong Kong and install them properly before meter fixing.

2. Space requirement for tariff meter shall comply with Drg. No. GCS/5/14.

3. The maximum length of metering cable connecting the V.T./C.T. terminals and tariff meter terminal is 15 metres. The cable shall be properly laid and secured on cable trays.

4. A Cat. 5e cable shall be supplied and installed by the customer with mechanical protection from the meter to the Tariff Meter Communication (TMC) Termination Box in the customer's switchroom. Each end of the mechanical protection shall be terminated with a junction box inside which there should be at least 1-metre spare length of the Cat. 5e cable. The junction boxes shall be within 0.5 metres of the meter and the TMC Termination Box.

5. Ferruling of multi-core cable and termination of meter will be done by HK Electric.

5.8 General Requirements of Current Transformer Chamber for Accommodation of Metering C.T.s & Voltage Fuses

1. Recommended dimensions of C.T. chamber are as follows:

   Depth : 300 mm (Min.)
   Height : 400 mm (Min.)
   Width : vary with size of installation (see below)

C.T. Ratio	Size of C.T. Min. I.D. (mm)	Max. O.D. (mm)	Max. Thickness (mm)	Min. Width (mm)
200/5 A	60	110	80	500
400/5 A	60	110	80	500
1000/5 A	120	180	40	650
2000/5 A	130	180	40	650

2. C.T.s shall be generously spaced between busbars. They shall be rigidly supported and insulated from live parts.

3. Bare copper bars shall be insulated by heat-shrinkable materials and correctly coded for phase identification.

4. Voltage fuses and link shall be provided to protect and isolate voltage supply to metering equipment. Details are:

   3 pcs. GEC type SC32H fuse carrier and base (black) complete with NS16 HRC fuse link.

   1 pc. GEC type SC32H fuse carrier and base (white) complete with NSC32A copper link.

5. Rigid supports shall be provided for mounting of conductor/busbar inside the chamber.

6. Minimum space of 900 mm must be maintained in front of the C.T. chamber for free access (full door swing) and as working space.

7. The sealable screw shall conform to Drg. No. GCS/5/19.

8. Multi-core cable between C.T. chamber and meter or meter panel will be provided by HK Electric and installed in position by the REC/REW.

9. The requirement for cable mounted C.T. chamber shall be similar to that of HK Electric C.T. cum-link box.

10. Fixing height of C.T. chamber (measured from the top of C.T. chamber to finished floor level) shall be as follows:

Meter Room/Switchboard	**Public Area**
Max. 2.60 m	Max. 2.60 m
Min. 0.90 m	Min. 2.15 m

11. A permanent, tidy and securely fixed flat/address label shall be provided at the conspicuous space of each C.T. chamber located inside the switchboard.

5.9 Requirements for Meter Leads and Meter Tails

1. General

   a. Size of meter leads and meter tails shall be according to the table as shown in Drg. No. GCS/5/14.

      Minimum size of conductors used for termination onto HK Electric whole current (direct connected) type meter shall be 4 mm^2 stranded copper conductor.

   b. The length of meter leads specified does not include customer's lateral mains.

   c. For the whole current (direct connected) type meter, the length of meter leads between main switch and meter terminals shall not exceed 3 metres.

   d. Only circular, multi-stranded copper conductors are allowed for termination onto HK Electric whole current (direct connected) type meter. Sector-shaped conductors are not allowed.

   e. All meter leads and meter tails shall be correctly coded for phase identification.

2. Phase Identification

   a. Single-phase Meter

      Where new colour coded cable is used in meter leads and/or tails, both meter leads and tails shall be fitted with proper, durable and legible phase identification labels (such as cable ties, sleeves, ferrules etc.) marked in L1 or L2 or L3 and N.

      Where new and old colour coded cables are used separately in meter leads and tails, a yellow warning notice in both English and Chinese shall be displayed at or close to the nearest upstream main switch/point of isolation. Details of the label shall comply with the latest edition of the Code of Practice for the Electricity (Wiring) Regulations.

b. Three-phase Meter

Where new colour coded cable is used in meter leads and tails, it is recommended that both meter leads and tails shall be fitted with proper, durable and legible phase identification labels (such as cable ties, sleeves, ferrules etc.) marked in L1, L2, L3 and N.

Where different colour coded cables are used in meter leads and tails, both the new and old colour coded cables shall be fitted with proper, durable and legible phase identification labels (such as cable ties, sleeves, ferrules etc.) marked in L1, L2, L3 and N. A yellow warning notice in both English and Chinese shall be displayed at or close to the nearest upstream main switch/point of isolation. Details of the label shall comply with the latest edition of the Code of Practice for the Electricity (Wiring) Regulations.

5.10 Ferrule Nos. for 12-core Cable

Core No.	1	2	3	4	5	6	7	8	9	10	11	12
Ferrule	D11	D10	D31	D30	D51	D50	E11	E31	E51	E71	Spare	

The ferrule nos. for 12-core cable apply to Summation and 11-kV/22-kV Metering Schemes only.

5.11 Special Summation Metering Scheme

The customer shall contact HK Electric to see whether their installation meets the requirements for special summation scheme. After the pre-requisites for special summation scheme are satisfied, technical details and quotations will then be forwarded to the customer for their consideration.

5.12 Removal of Meters and Related Services from a Building Due to Demolition

Before forwarding the request for meter disconnection and service removal, the developer/architect/contractor shall make sure that all the customers no longer need electricity supply and have vacated from the premises. The written request for meter disconnection and related services shall reach HK Electric at least six weeks before the intended service removal date.

The developer/architect/contractor is also requested to return a duly completed Form TD 40 (Confirmation of No Asbestos Containing Material (ACM) Hazard) confirming that there is no ACM hazard at the specified period for our meter/service removal at the building to be demolished.

HK Electric will arrange to remove our meters at the above building after the completion of the service removal works. The developer/architect/contractor is reminded not to interfere with or remove our meters. If our meters are in any way damaged or lost in the course of, or as a result of the works of the developer /architect/contractor, HK Electric shall hold the developer/architect/contractor fully liable for all losses and damage suffered by HK Electric including all cost incurred.

5.13 Metering Arrangement for Electric Vehicle Charging Facilities

For details, please refer to Chapter 7 – Electric Vehicle Charging Facilities.

5.14 Fire Resisting Enclosure (FRE) for Tariff Meters

1. During the planning stage, the REC/REW shall submit the design and installation method of the proposed FRE to HK Electric for consideration. The design shall comply with Drg. No. GCS/5/22.

2. The FRE, including transparent glass and access panel, shall be constructed to have a fire resisting period of not less than 1 hour with regard to both integrity and insulation, complying with Fire Services Department & Building Department's requirements and other relevant Government Ordinances and Regulations.

3. The fire rated enclosure shall not be filled with thermal insulation. The current carrying capacity of the cable will be reduced if the cable and accessories are thermal insulated.

4. The current carrying capacity of the cable shall not be jeopardized after the work. If the current carrying capacity is reduced after installing enclosure, the cable size shall be enlarged.

5. Adequate working space shall be provided for future maintenance and repair.

6. In case of any work required by HK Electric, such as meter removal, disconnection & reconnection, the building owner shall be responsible for dismantling and reinstatement of the FRE.

7. If any relocation of tariff meters is required to facilitate the installation of FRE, please contact HK Electric at 2887 3455 before work commencement.

5.15 Requirements for Tariff Meter Communication (TMC) Infrastructure Provisions in New Buildings/Existing Buildings with Major Renovation

1. Tariff Meter Communication (TMC) Infrastructure provisions shall be made by customers during the design and construction stage of new buildings/existing buildings with major renovation in the electrical installation. The proposed arrangements of facilities (as shown in Drg. Nos. GCS/5/23 and GCS/5/24) for the TMC infrastructure provisions should be submitted to HK Electric for consideration during the design stage.

2. The following facilities shall be supplied and installed at locations specified in Drg. No. GCS/5/25 and customers are responsible for subsequent repair and maintenance of the facilities.

   a. A single-phase double-pole protective device of rating not less than 6 A and 5-A single-phase fused connection unit shall be installed to provide a supply for TMC equipment. This 6-A single-phase double-pole protective device shall be connected from an unmetered lateral/rising mains and a metallic enclosure for the protective device shall be properly earthed. The wires amongst the protective device, the fused connection unit and the unmetered lateral/rising mains shall be of at least 4-mm^2 Cu PVC/PVC cable. A typical arrangement for the above is shown in Drg. No. GCS/5/26.

   b. One hard wood with varnish treatment board of minimum size 600 mm x 400 mm (H x W), with a front clearance of minimum 900 mm and at least 12 mm thick for mounting of the TMC equipment enclosure and the fuse connection unit shall be provided. Fixing height of the wooden board shall be as follows:

      Meter Room/Main Switchroom

      Max. 2.00 m
      Min. 0.80 m

   c. Relevant plastic engraved labels with the words 'DO NOT DISTURB (FOR HK ELECTRIC ONLY) 請勿干擾 (港燈專用)' shall be installed on the wooden board, fused connection unit and protective device as shown in Drg. Nos. GCS/5/23 and GCS/5/24.

3. For buildings with HK Electric distribution substations, the following additional facilities shall be provided between the customer's main switchroom(s) and meter room(s) on the lowest floor for tenants:

a. One set of 20-mm diameter earthed galvanised iron (G.I.) conduit, with associated G.I. junction boxes shall be installed from the TMC termination box at the customer's main switchroom up through to each meter room(s) of the lowest floor above customer's main switchroom. The G.I. conduit shall be supported and fixed to the side wall at an interval of not more than 1200 mm. The method of anchoring conduit must be by red-head or similar device.

The G.I. junction boxes shall be earthed and be installed on the wooden board for TMC equipment enclosure and also adjacent to the TMC termination box in the customer's main switchroom. The size of the junction boxes should be 86 mm x 86 mm x at least 45 mm (H x W x D). The covers of the junction boxes should be labelled by plastic engraved labels with the words 'DO NOT DISTURB (FOR HK ELECTRIC ONLY) 請勿干擾 (港燈專用)' as shown in Drg. No. GCS/5/23.

b. Cat. 6 STP (Shielded Twisted Pair) communication cables shall be supplied and installed from the TMC termination box at the customer's main switchroom up through to the junction box on the wooden board via the GI conduit. The customers are required to provide testing and commissioning reports for the installed Cat. 6 STP communication cables to HK Electric. HK Electric reserves the right to conduct separate tests/witness tests to ensure an acceptable performance of the installed communication cables.

An additional length of 1 metre for the Cat. 6 STP communication cables should be coiled inside the TMC termination box and the junction box on the wooden board. The cable end at the wooden board shall be terminated according to the RJ45 T568B standard.

5.16 Schedule of Drawings – Metering Requirements

Drawing No.	Drawing Title
GCS/5/01	General Metering Arrangement for Single 11-kV Supply
GCS/5/02	General Metering Arrangement for Single 22-kV Supply
GCS/5/03	General Metering Arrangement for Single Transformer Supply
GCS/5/04	Metering Arrangement for Two Transformer Supplies with Bus-Section Circuit Breaker

GCS/5/05	Metering Arrangement for Two Transformer Supplies with Two Bus-Section Circuit Breakers
GCS/5/06	General Metering Arrangement for Multi-Customer Premises
GCS/5/07	Metering Arrangement for Building Supply (Essential Supply from Standby Generator)
GCS/5/08	Metering Arrangement for Building Supply (Essential Supply Tee-Off Before Building Main Switch) (Total 2 sheets)
GCS/5/09	Incorrect Metering Arrangement for Building Supply
GCS/5/10	Metering Arrangement for Building Supply (Two Transformer Supplies with Bus-Section Circuit Breaker) (Total 2 sheets)
GCS/5/11	Incorrect Metering Arrangement for Building Supply (Two Transformer Supplies with Bus-Section Circuit Breaker) (Total 2 sheets)
GCS/5/12	Metering Arrangement for Upper Floor Customers with Dedicated Riser
GCS/5/13	Metering Arrangement for Communal Electrical Supply (No Essential Service)
GCS/5/14	Tariff Meter Dimensions/Termination Clearance/Meter Board/Leads Requirements
GCS/5/15	Typical Meter Board Arrangement
GCS/5/16	Meter Board Arrangement for Public Area
GCS/5/17	Meter Board Arrangement for Meter Room/Switchboard
GCS/5/18	Minimum Space Requirements for Meter Duct/Room
GCS/5/19	Requirements for Metering Current Transformer Chamber
GCS/5/20	Metering Requirements for Main Switch Rating Exceeding 100 A and up to 400 A
GCS/5/21	Wiring Diagram for C.T. Operated Meter

GCS/5/22	Requirements for Meter Cubicle/Enclosure in Existing Buildings
GCS/5/23	Facilities for Tariff Meter Communication (TMC) Infrastructure - TMC/R/1A (Apply to Meter Room(s) on the Lowest Floor)
GCS/5/24	Facilities for Tariff Meter Communication (TMC) Infrastructure - TMC/R/1B (Apply to Meter Room(s) Other Than the Lowest Floor)
GCS/5/25	Locations of Facilities for Tariff Meter Communication (TMC) Infrastructure - TMC/R/2
GCS/5/26	Typical Supply Arrangement for Tariff Meter Communication (TMC) Infrastructure

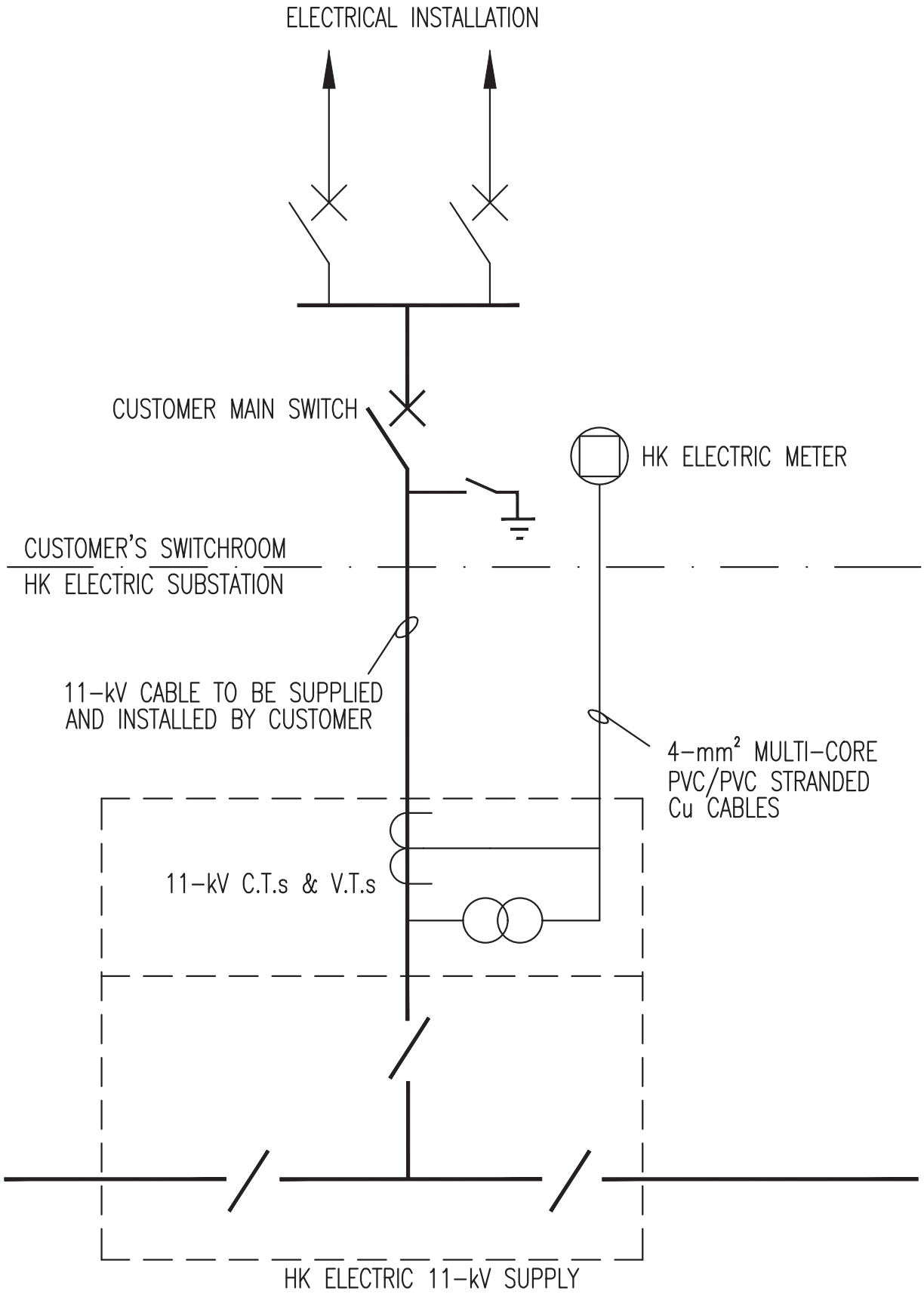

Drg. No. GCS/5/01

GENERAL METERING ARRANGEMENT FOR SINGLE 11-kV SUPPLY

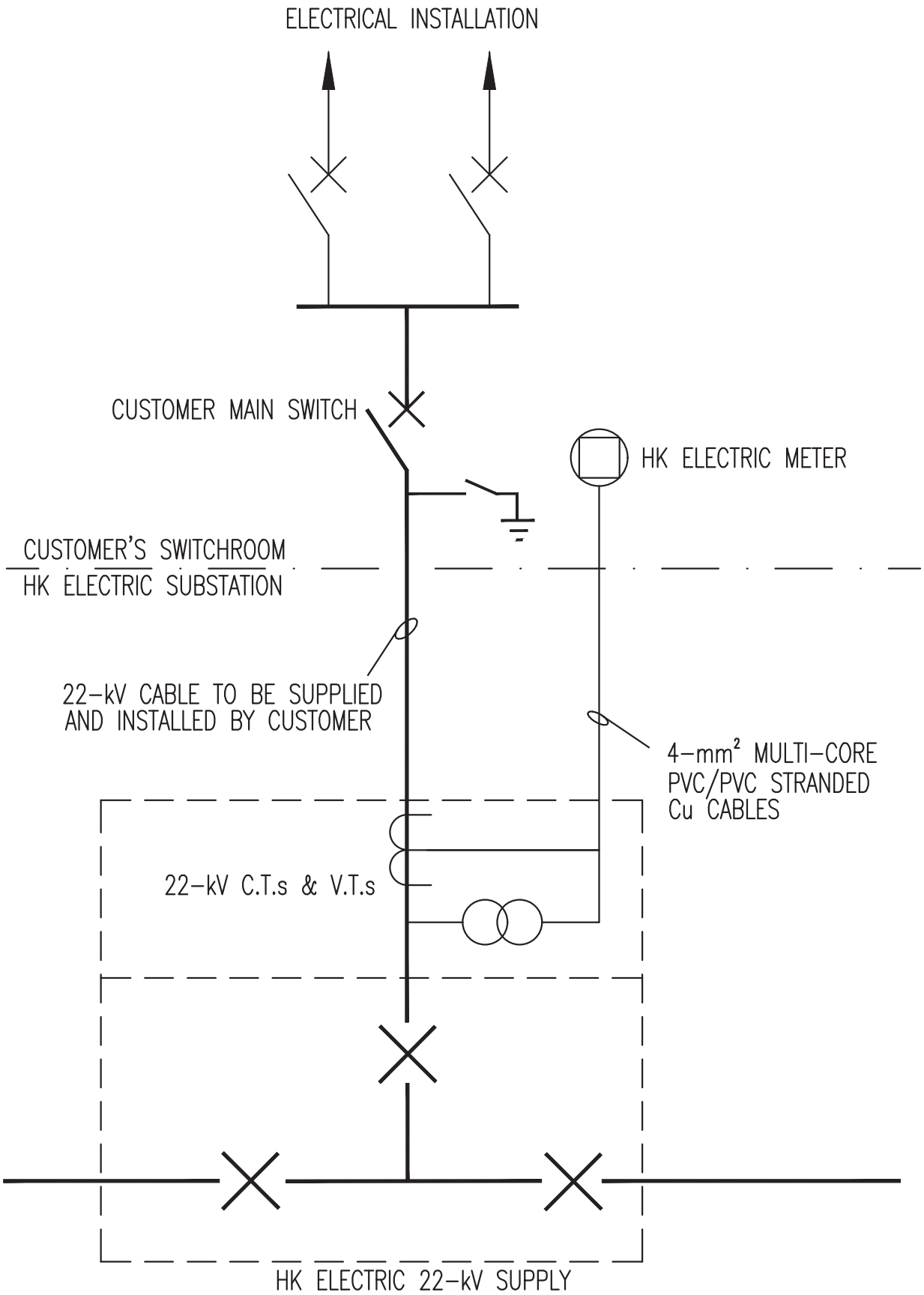

Drg. No. GCS/5/02

GENERAL METERING ARRANGEMENT FOR SINGLE 22-kV SUPPLY

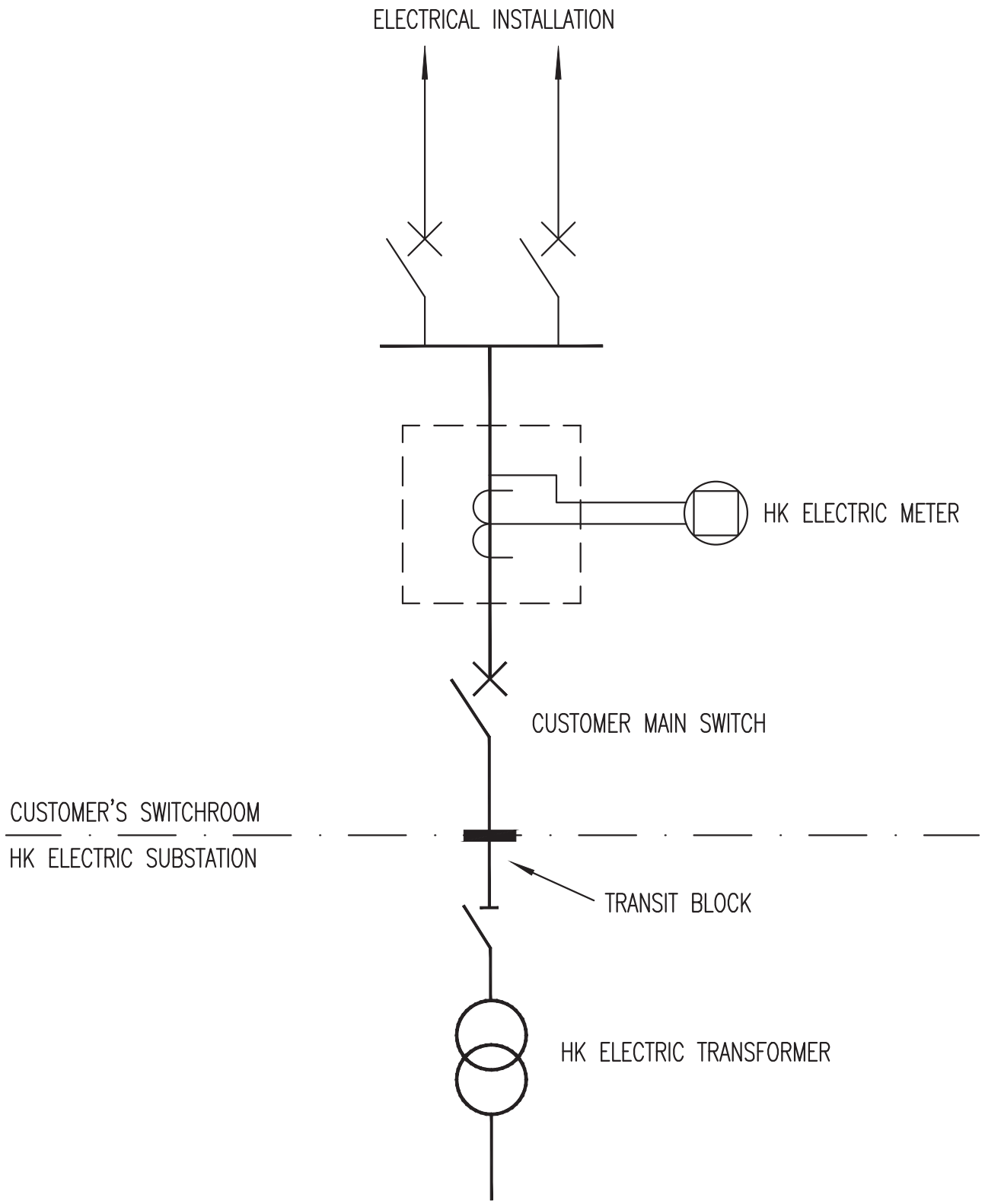

Drg. No. GCS/5/03

GENERAL METERING ARRANGEMENT FOR SINGLE TRANSFORMER SUPPLY

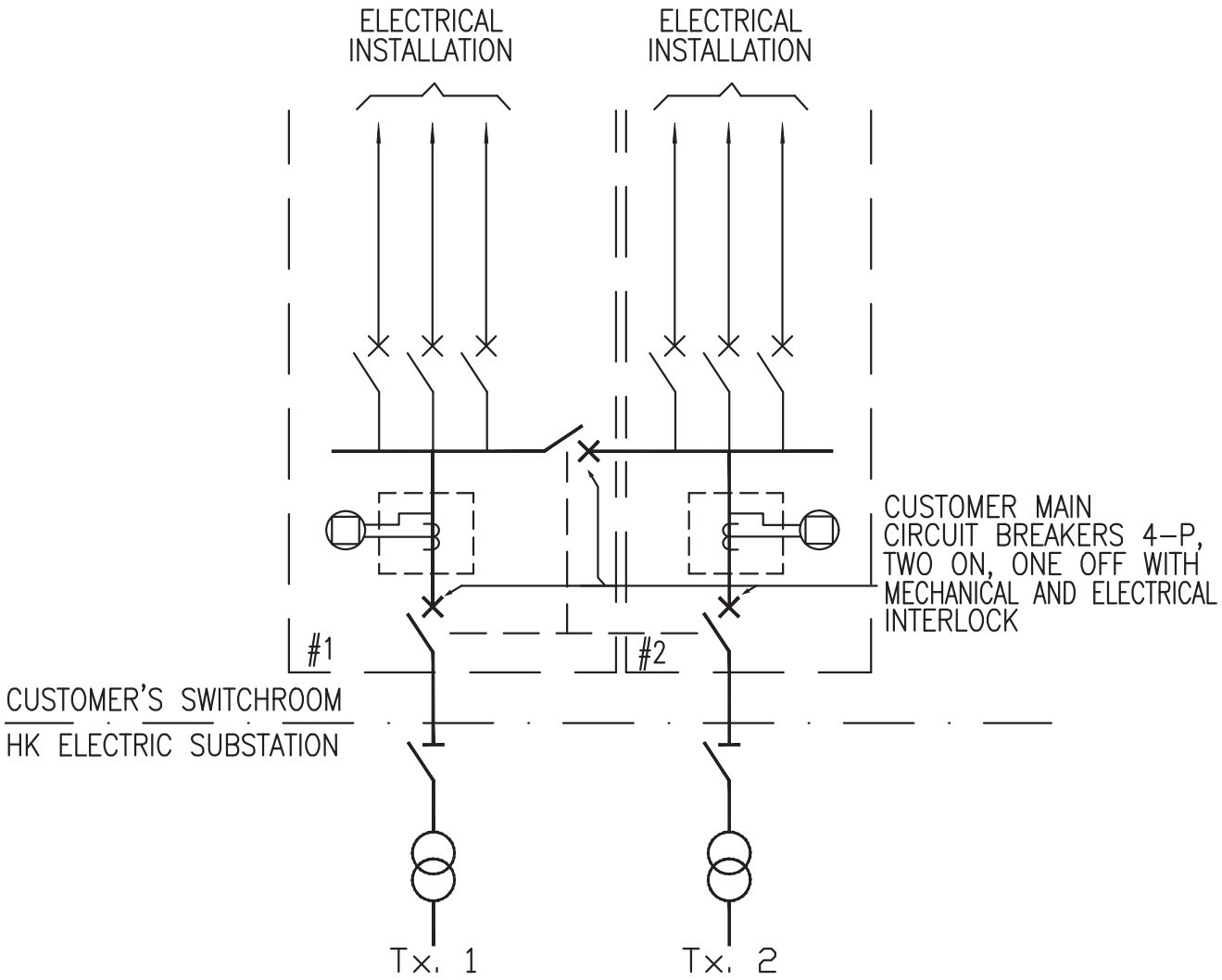

NOTES :

1. WHEN AN INSTALLATION IS SUPPLIED BY MORE THAN ONE HK ELECTRIC SOURCE, SUCH AS TRANSFORMERS, THE MINIMUM NUMBER OF ENERGY (kWh) METERS TO BE INSTALLED SHALL BE EQUAL TO THE NUMBER OF HK ELECTRIC SOURCES. ONE APPLICATION SHALL BE PROVIDED FOR EACH kWh METER.
2. # NO. INDICATES THE SEQUENCE OF APPLICATION FORMS REQUIRED.
3. ALL INTERLOCKING FACILITY BETWEEN MAIN SWITCHES SHALL BE INSPECTED IN THE FIRST INSPECTION.

Drg. No. GCS/5/04

METERING ARRANGEMENT FOR TWO TRANSFORMER SUPPLIES WITH BUS-SECTION CIRCUIT BREAKER

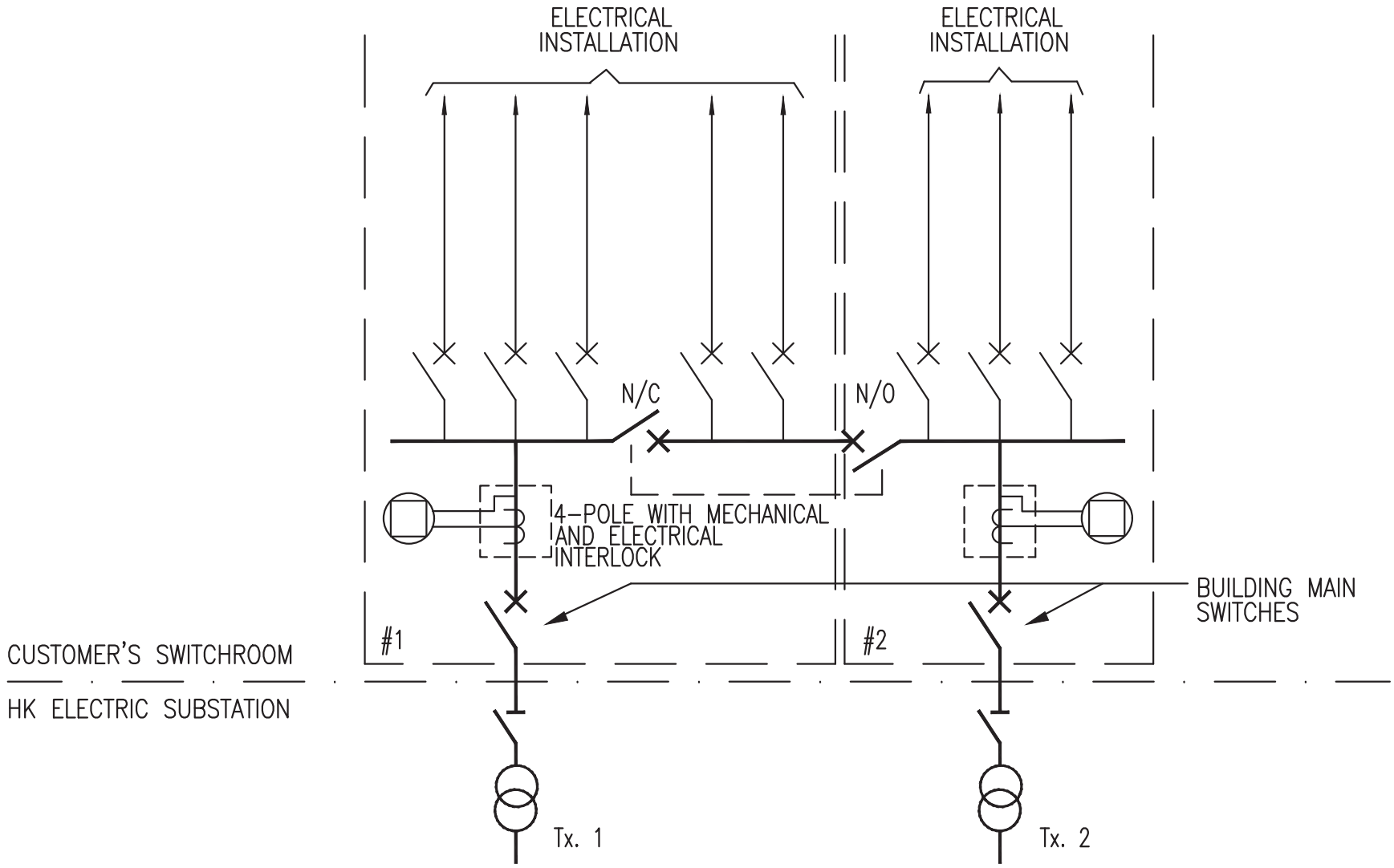

REFER TO THE NOTES ON DRG. NO. GCS/5/04

Drg. No. GCS/5/05

METERING ARRANGEMENT FOR TWO TRANSFORMER SUPPLIES WITH TWO BUS-SECTION CIRCUIT BREAKERS

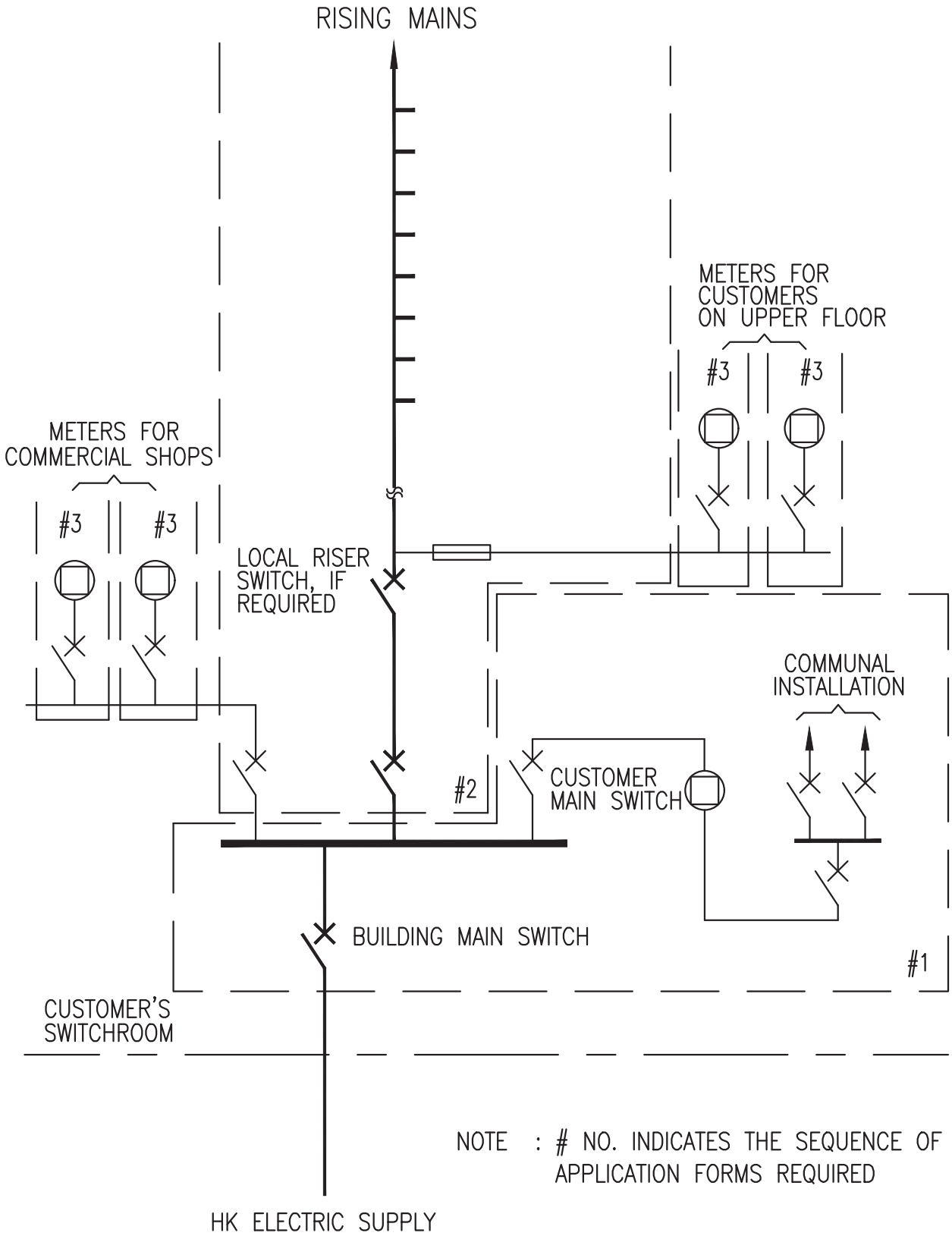

Drg. No. GCS/5/06

GENERAL METERING ARRANGEMENT FOR MULTI-CUSTOMER PREMISES

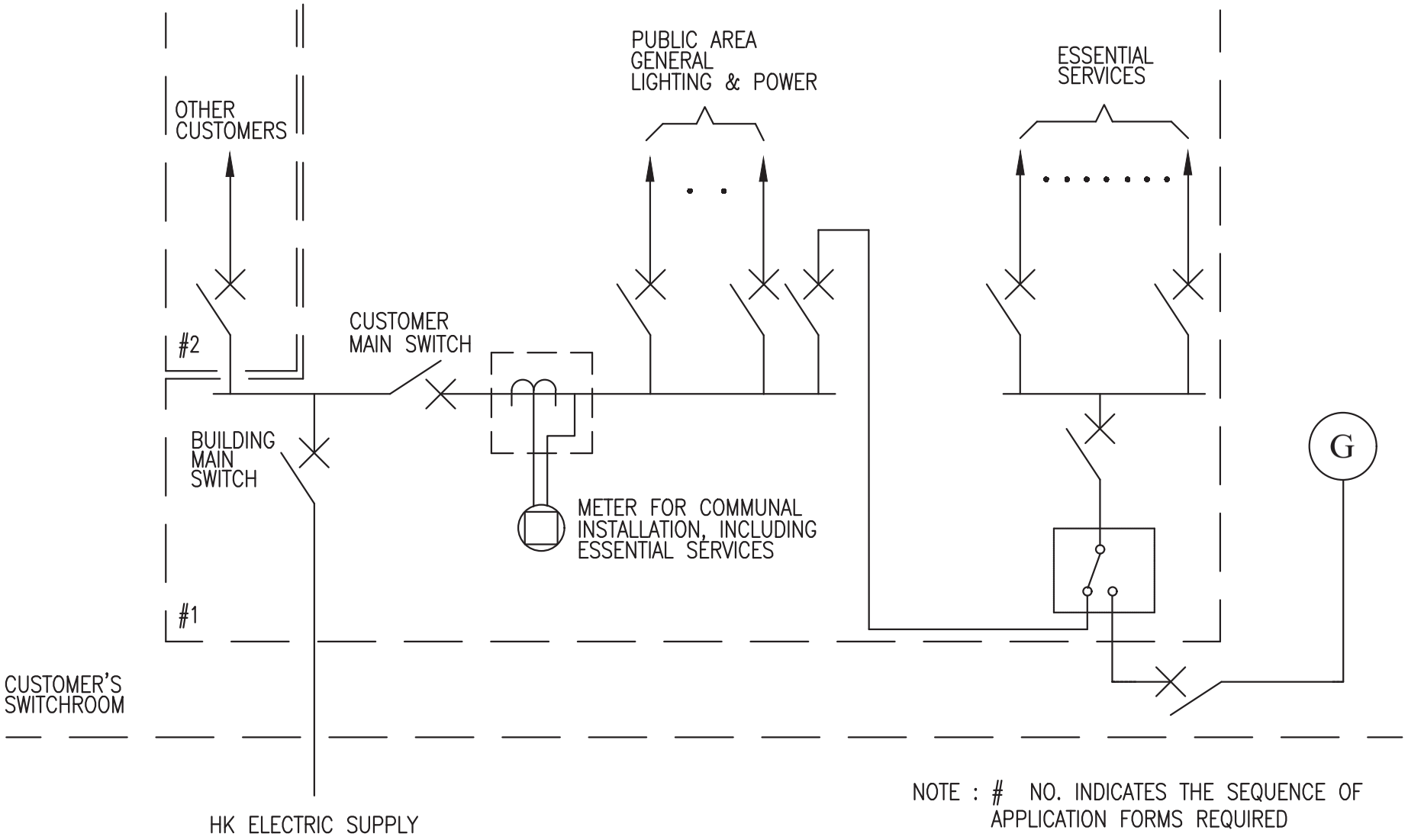

Drg. No. GCS/5/07

METERING ARRANGEMENT FOR BUILDING SUPPLY (ESSENTIAL SUPPLY FROM STANDBY GENERATOR)

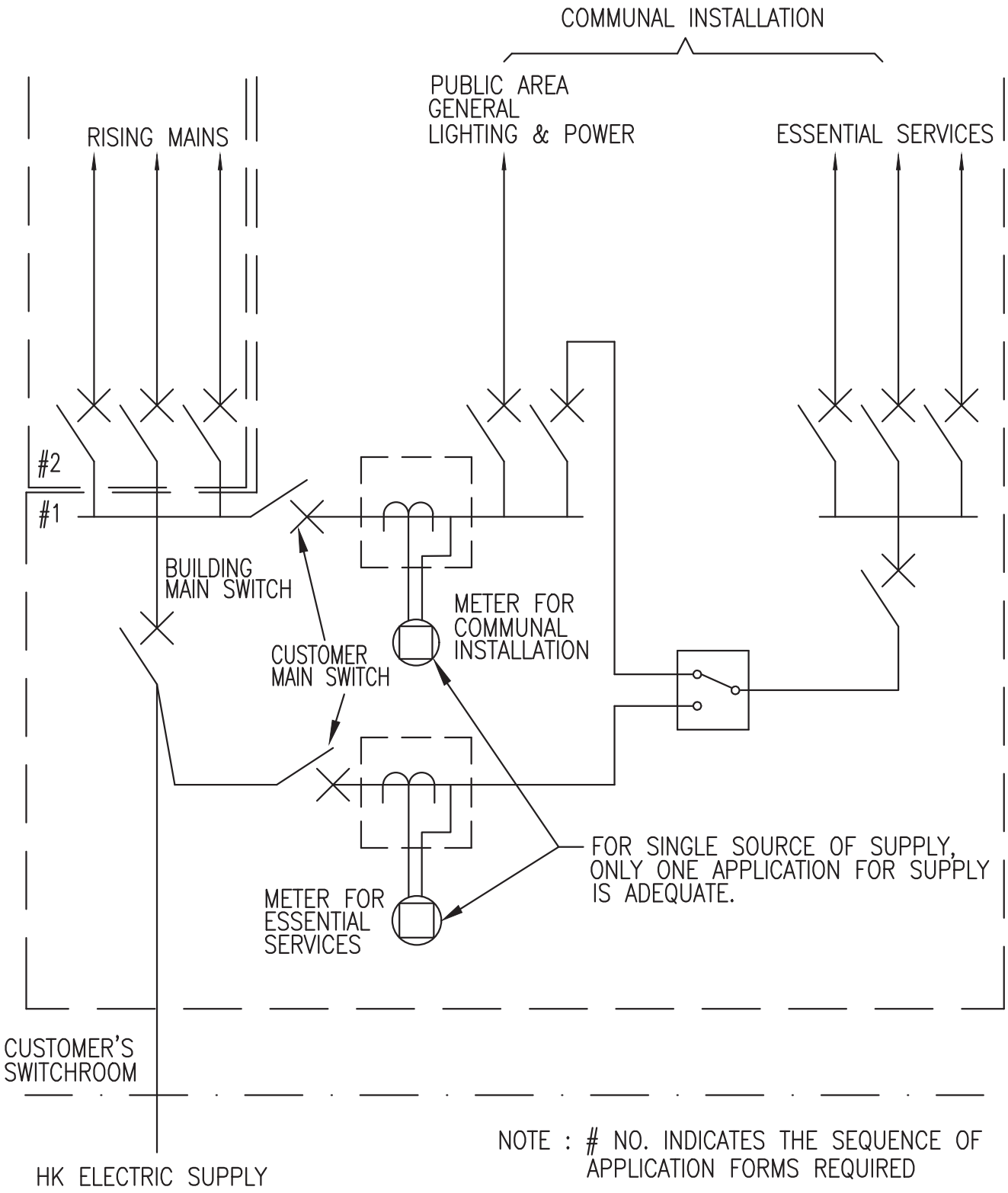

Drg. No. GCS/5/08

METERING ARRANGEMENT FOR BUILDING SUPPLY
(ESSENTIAL SUPPLY TEE-OFF BEFORE BUILDING MAIN SWITCH)
SHEET 1 OF 2

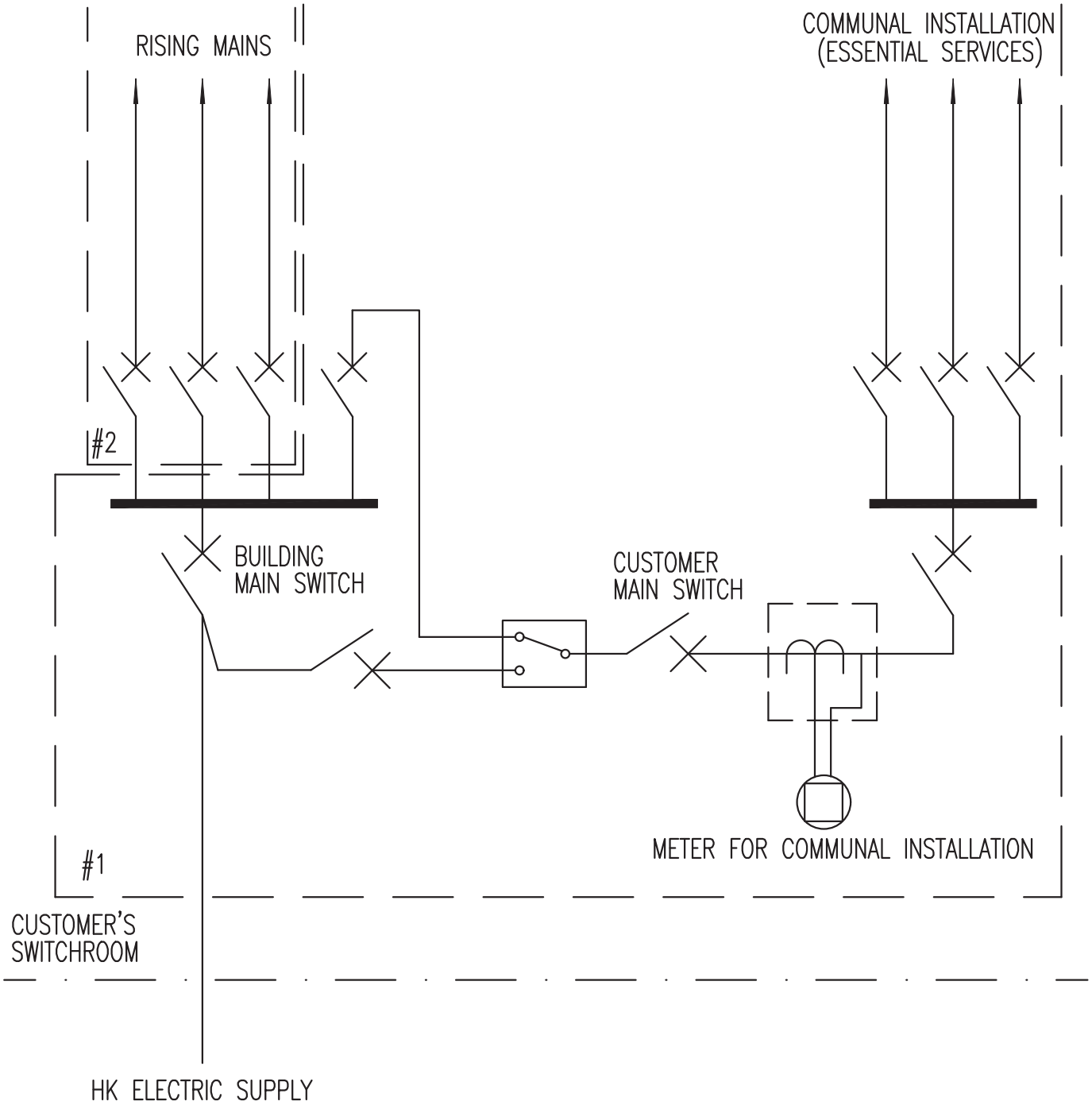

NOTE : # NO. INDICATES THE SEQUENCE OF APPLICATION FORMS REQUIRED

Drg. No. GCS/5/08

METERING ARRANGEMENT FOR BUILDING SUPPLY
(ESSENTIAL SUPPLY TEE-OFF BEFORE BUIDING MAIN SWITCH)
SHEET 2 OF 2

NOTE :

ONLY ONE METER IS REQUIRED TO RECORD THE TOTAL CONSUMPTION OF THE COMMUNAL INSTALLATION AND THE METER SHALL BE INSTALLED AFTER THE CHANGEOVER DEVICE.
(REFER TO DRG. NO. GCS/5/08 SHEET 2 OF 2)

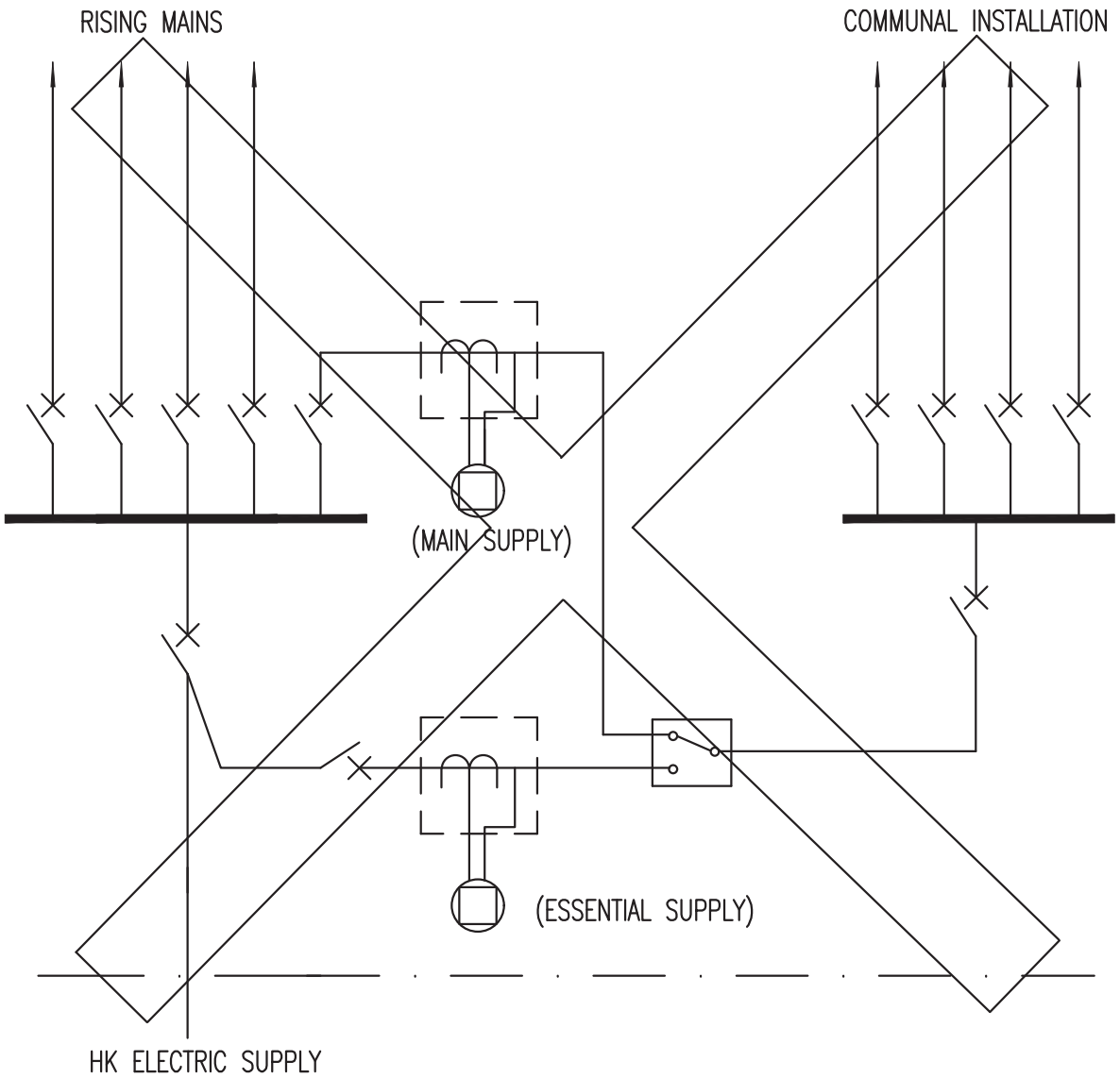

Drg. No. GCS/5/09

INCORRECT METERING ARRANGEMENT FOR BUILDING SUPPLY

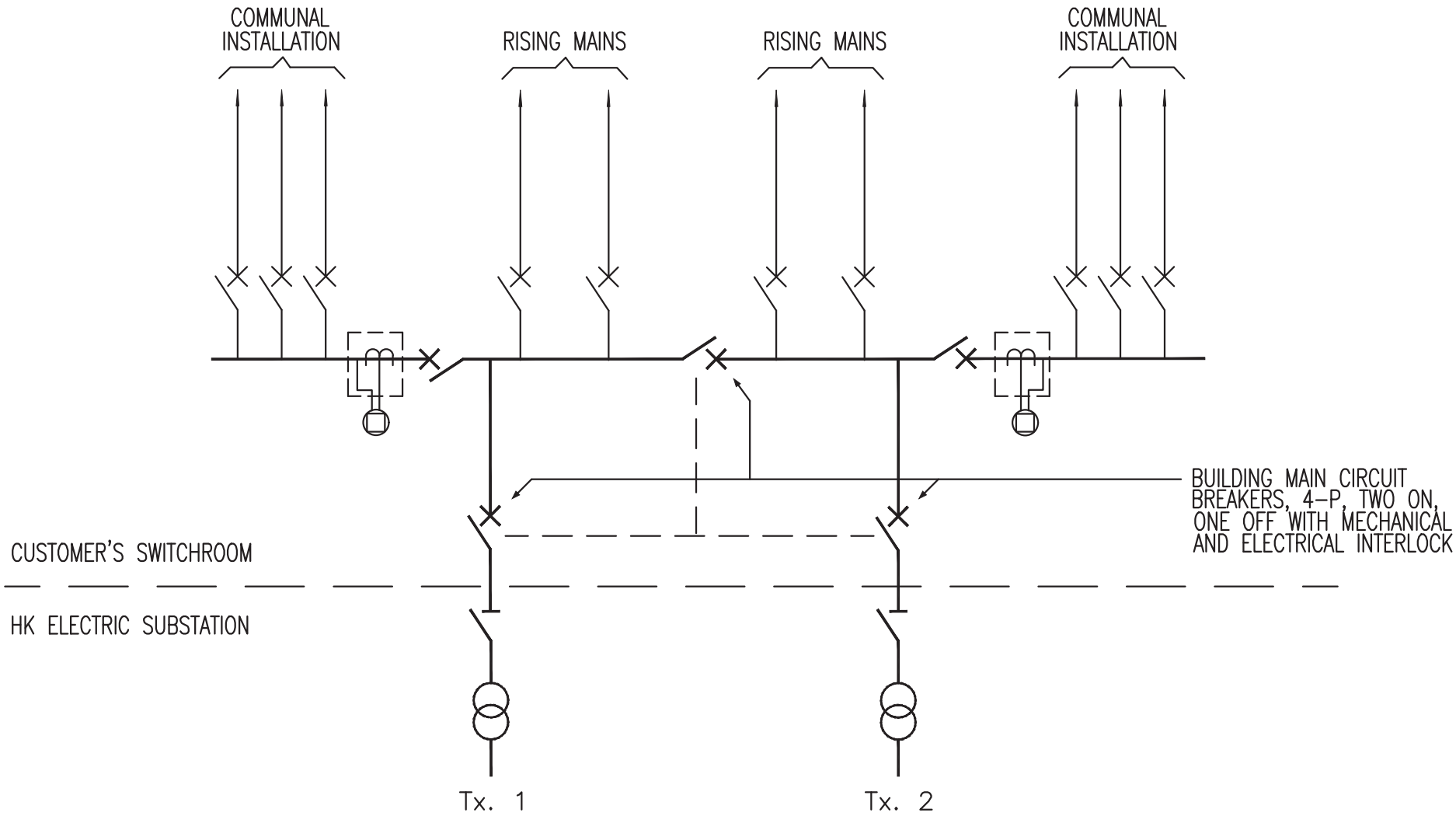

Drg. No. GCS/5/10

METERING ARRANGEMENT FOR BUILDING SUPPLY

(TWO TRANSFORMER SUPPLIES WITH BUS-SECTION CIRCUIT BREAKER) SHEET 1 OF 2

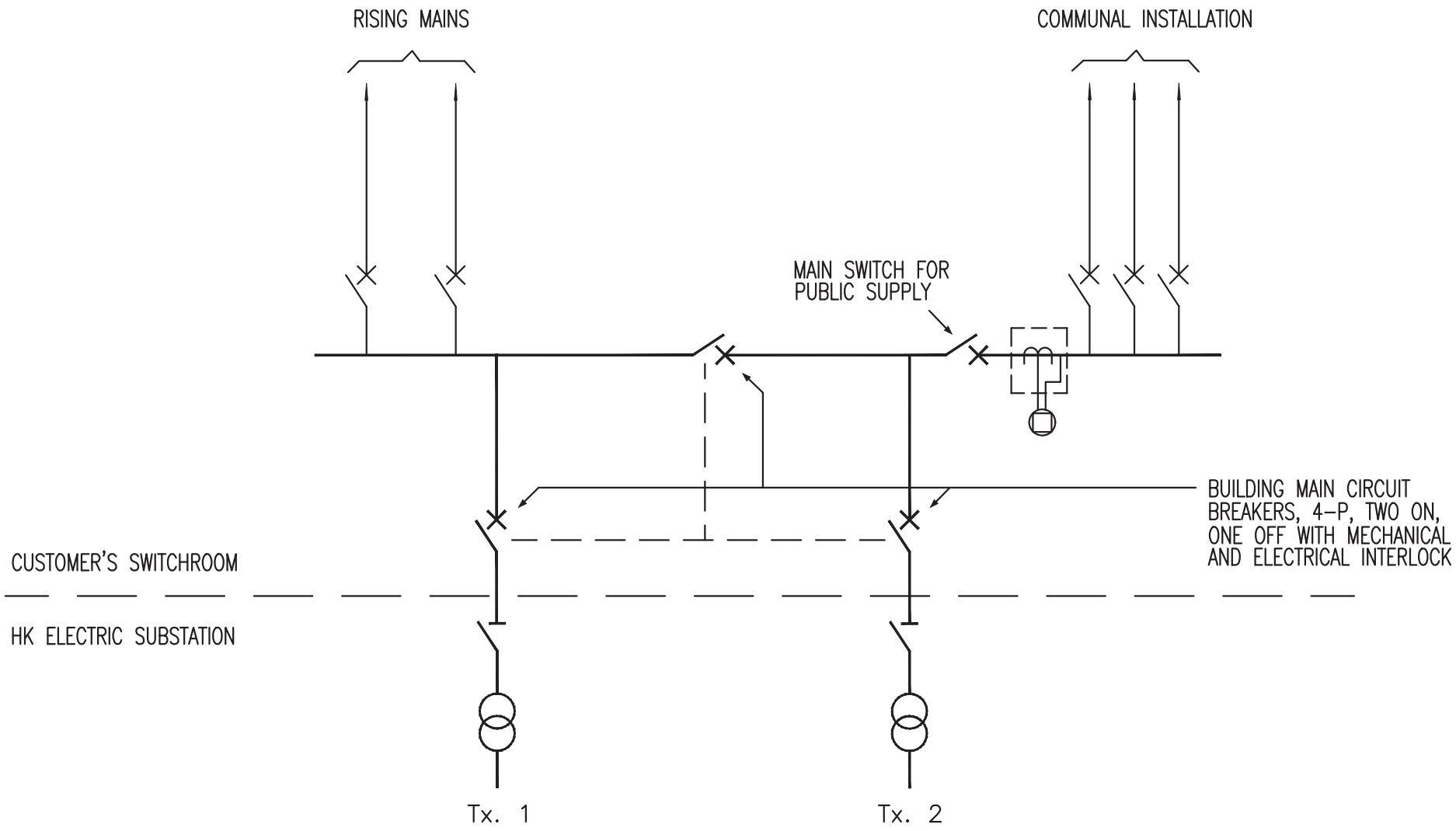

Drg. No. GCS/5/10

METERING ARRANGEMENT FOR BUILDING SUPPLY

(TWO TRANSFORMER SUPPLIES WITH BUS-SECTION CIRCUIT BREAKER) SHEET 2 OF 2

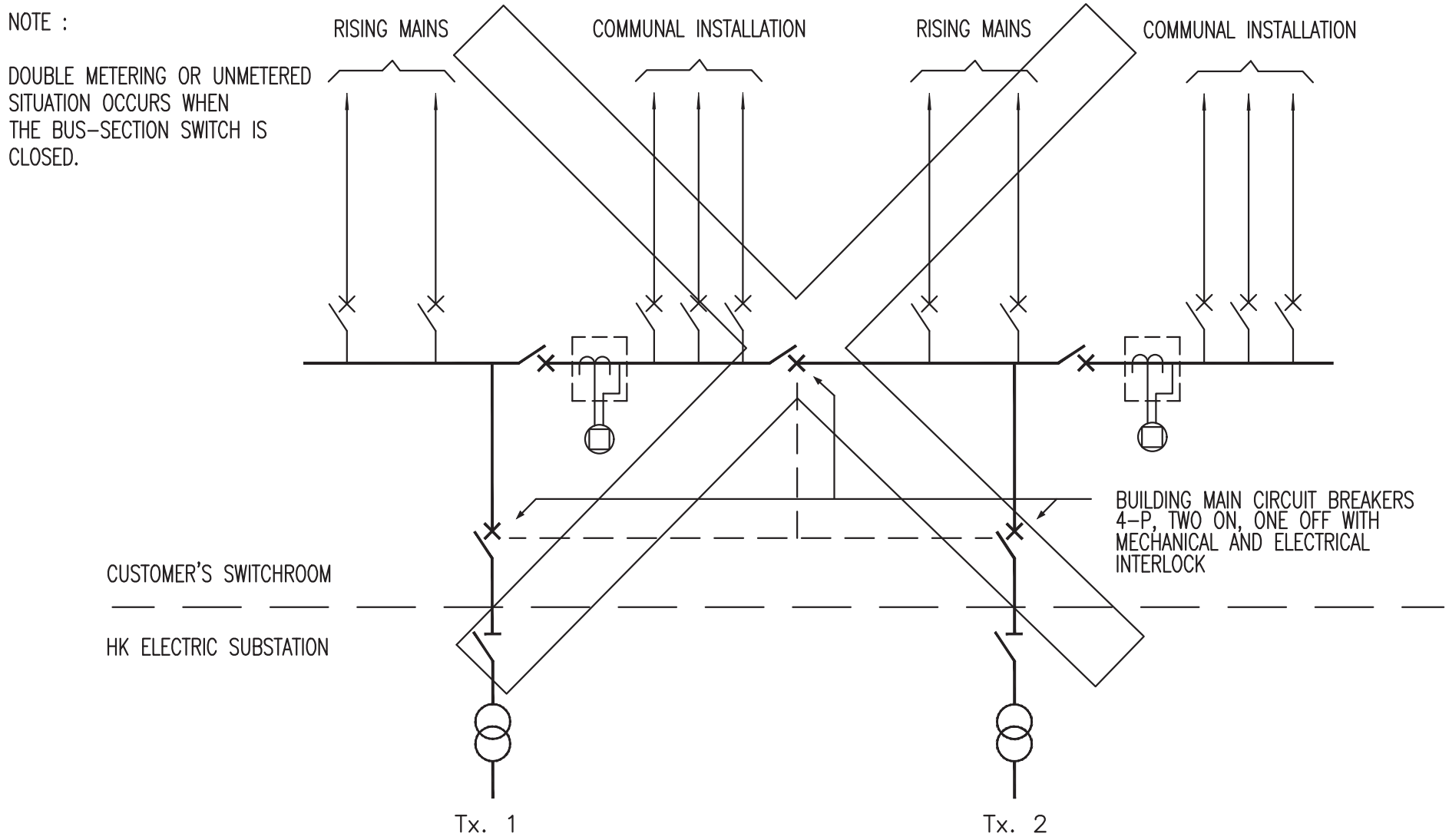

Drg. No. GCS/5/11

INCORRECT METERING ARRANGEMENT FOR BUILDING SUPPLY

(TWO TRANSFORMER SUPPLIES WITH BUS-SECTION CIRCUIT BREAKER) SHEET 1 OF 2

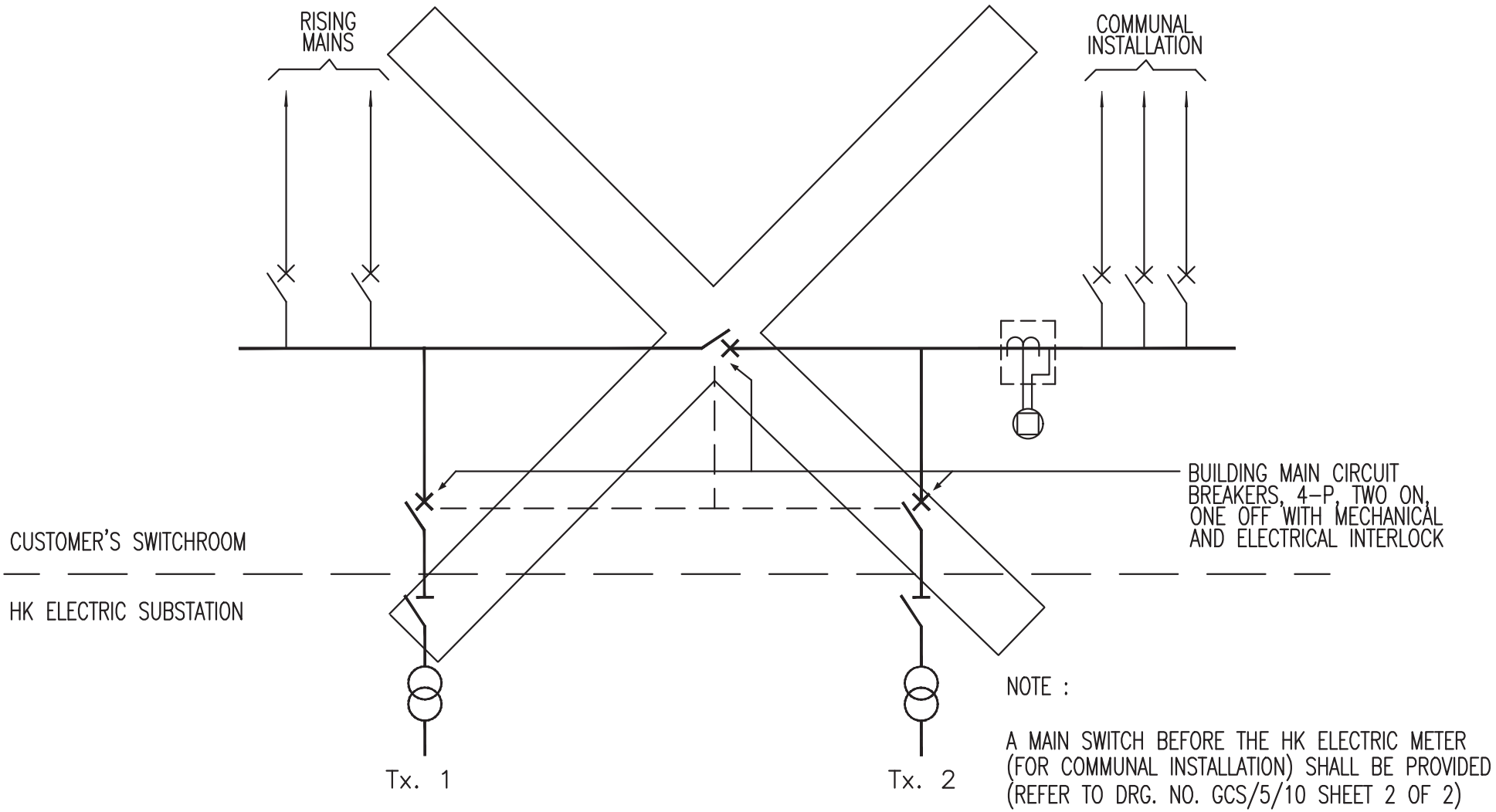

Drg. No. GCS/5/11

INCORRECT METERING ARRANGEMENT FOR BUILDING SUPPLY (TWO TRANSFORMER SUPPLIES WITH BUS-SECTION CIRCUIT BREAKER) SHEET 2 OF 2

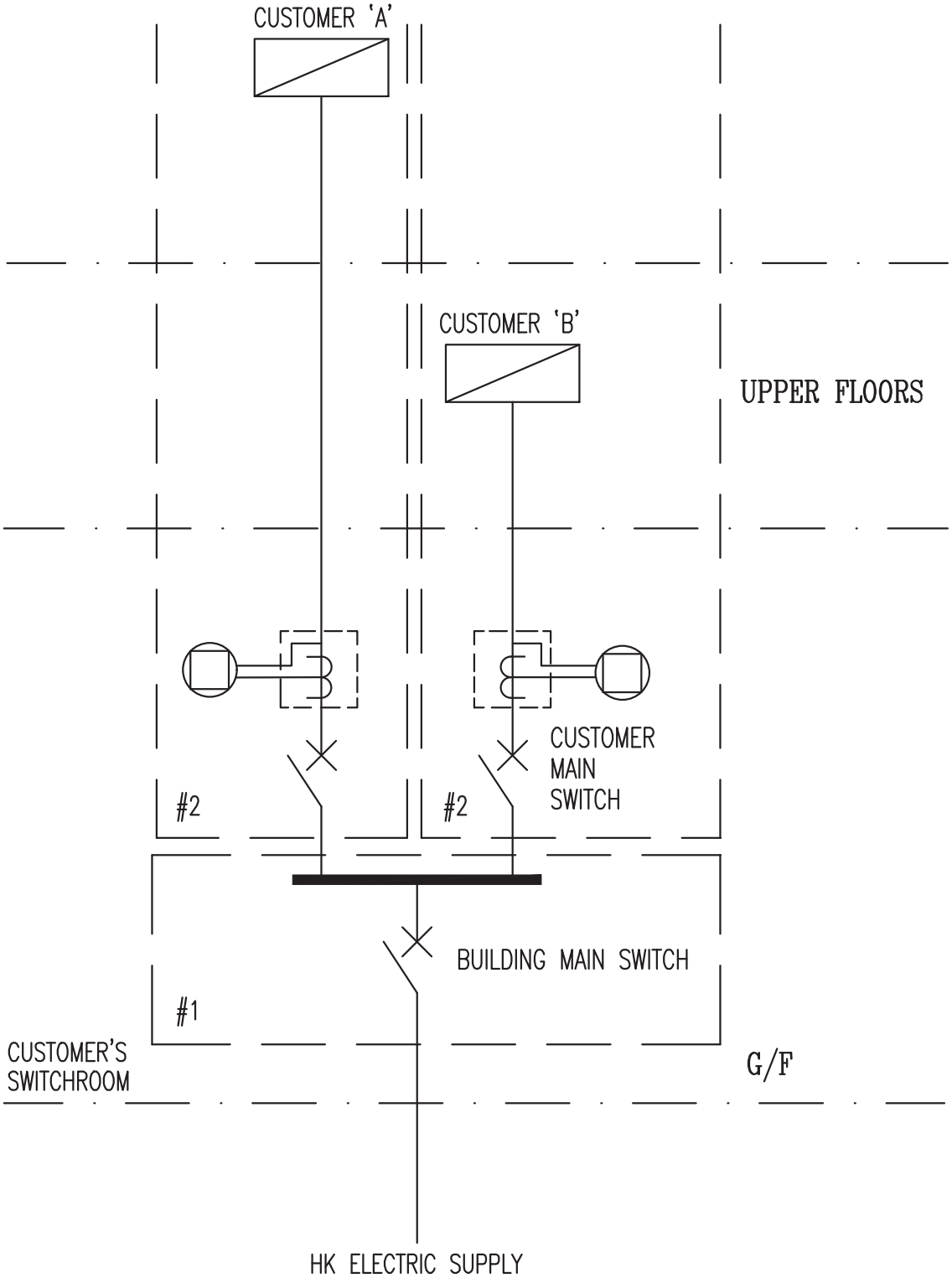

NOTE : # NO. INDICATES THE SEQUENCE OF APPLICATION FORMS REQUIRED

Drg. No. GCS/5/12

METERING ARRANGEMENT FOR UPPER FLOOR CUSTOMERS WITH DEDICATED RISER

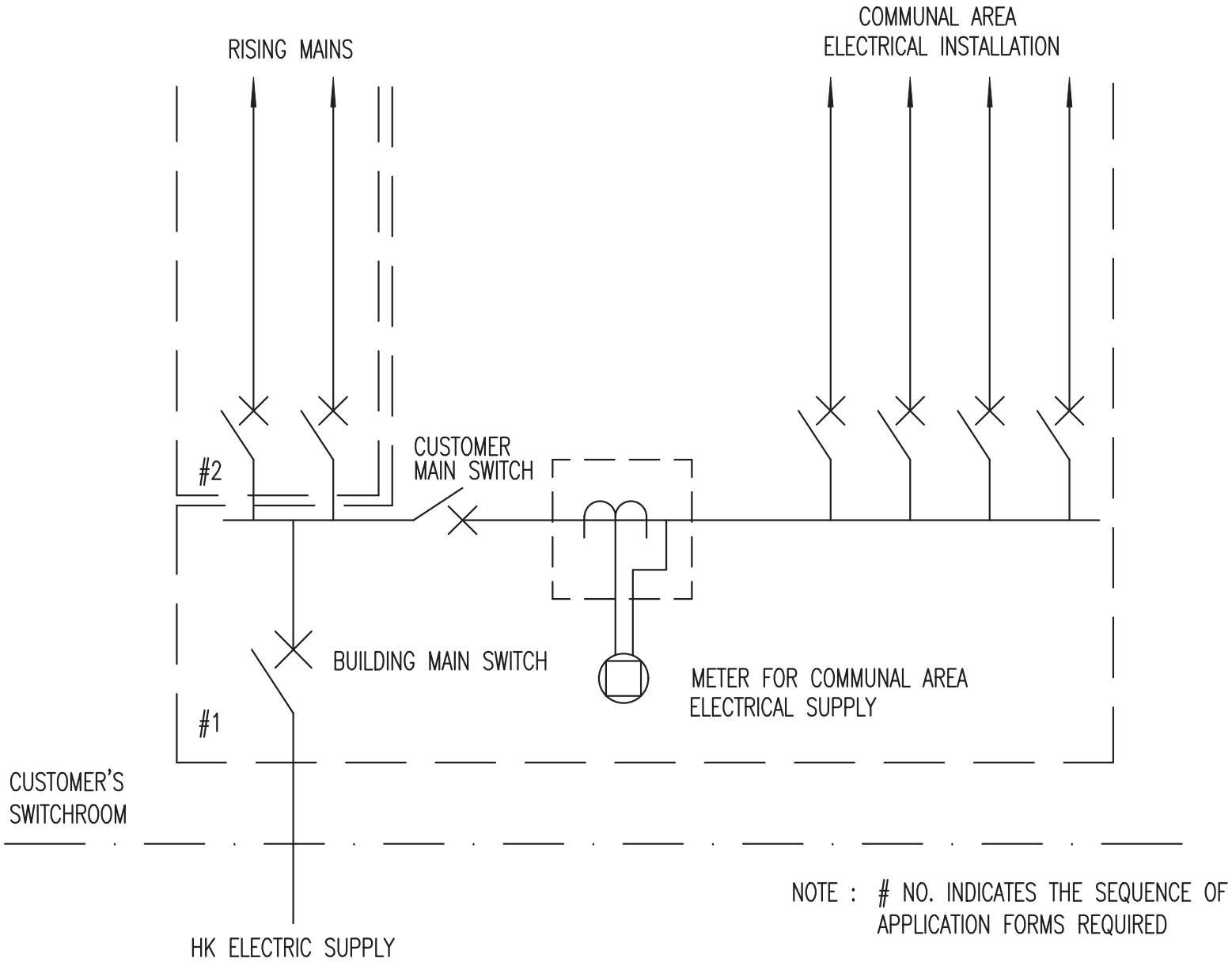

Drg. No. GCS/5/13

METERING ARRANGEMENT FOR COMMUNAL ELECTRICAL SUPPLY (NO ESSENTIAL SERVICE)

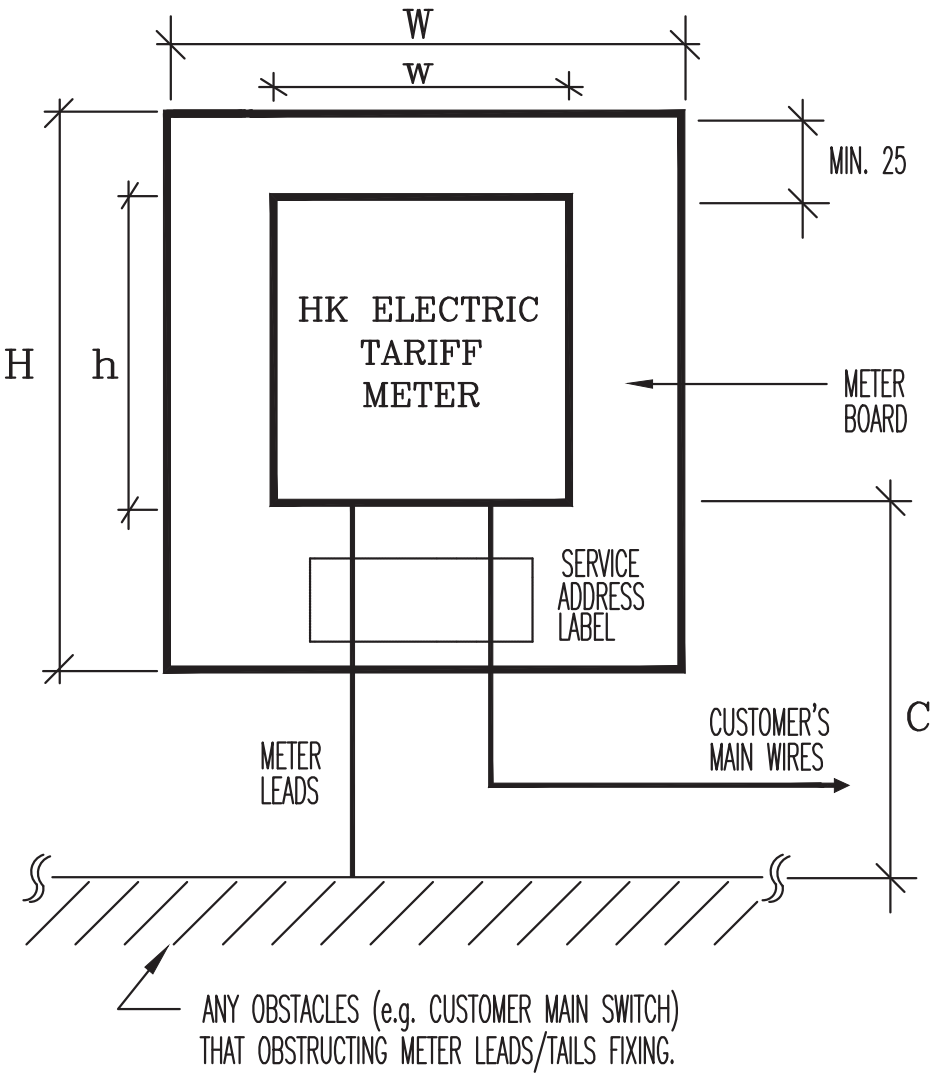

METER TYPES	MAIN SWITCH RATING (A)	METER LEADS/ TAILS SIZE (mm^2)	MINIMUM CLEARANCE FOR METER TERMINATION	TARIFF METER DIMENSIONS			METER BOARD DIMENSIONS	
			C	h	w	d	H	W
1– Ø	⩽ 60	25	150	180	140	130	280	210
3– Ø	⩽ 100	35	200	280	200	170	430	300
3– Ø C.T. OPERATED METER	> 100	4	250	330	200	170	480	300
11 kV/22 kV	⩽ 200	4	250	330	200	170	480	300

NOTES : 1. RECOMMENDED SIZE OF ADDRESS LABEL : 120 x 60 mm^2.
2. UNLESS OTHERWISE STATED, ALL DIMENSIONS ARE IN mm.

Drg. No. GCS/5/14

TARIFF METER DIMENSIONS/TERMINATION CLEARANCE/METER BOARD/LEADS REQUIREMENTS

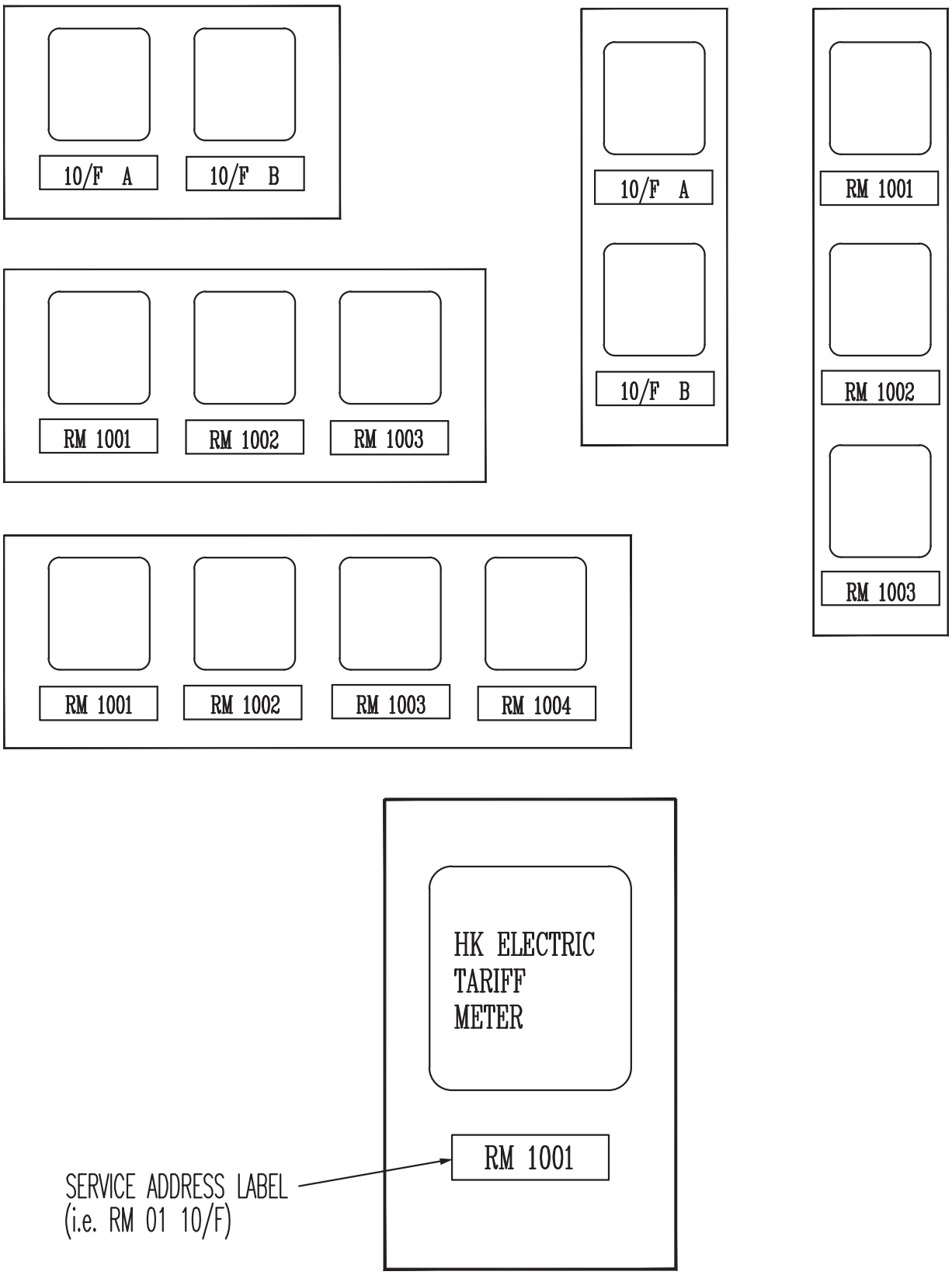

Drg. No. GCS/5/15

TYPICAL METER BOARD ARRANGEMENT

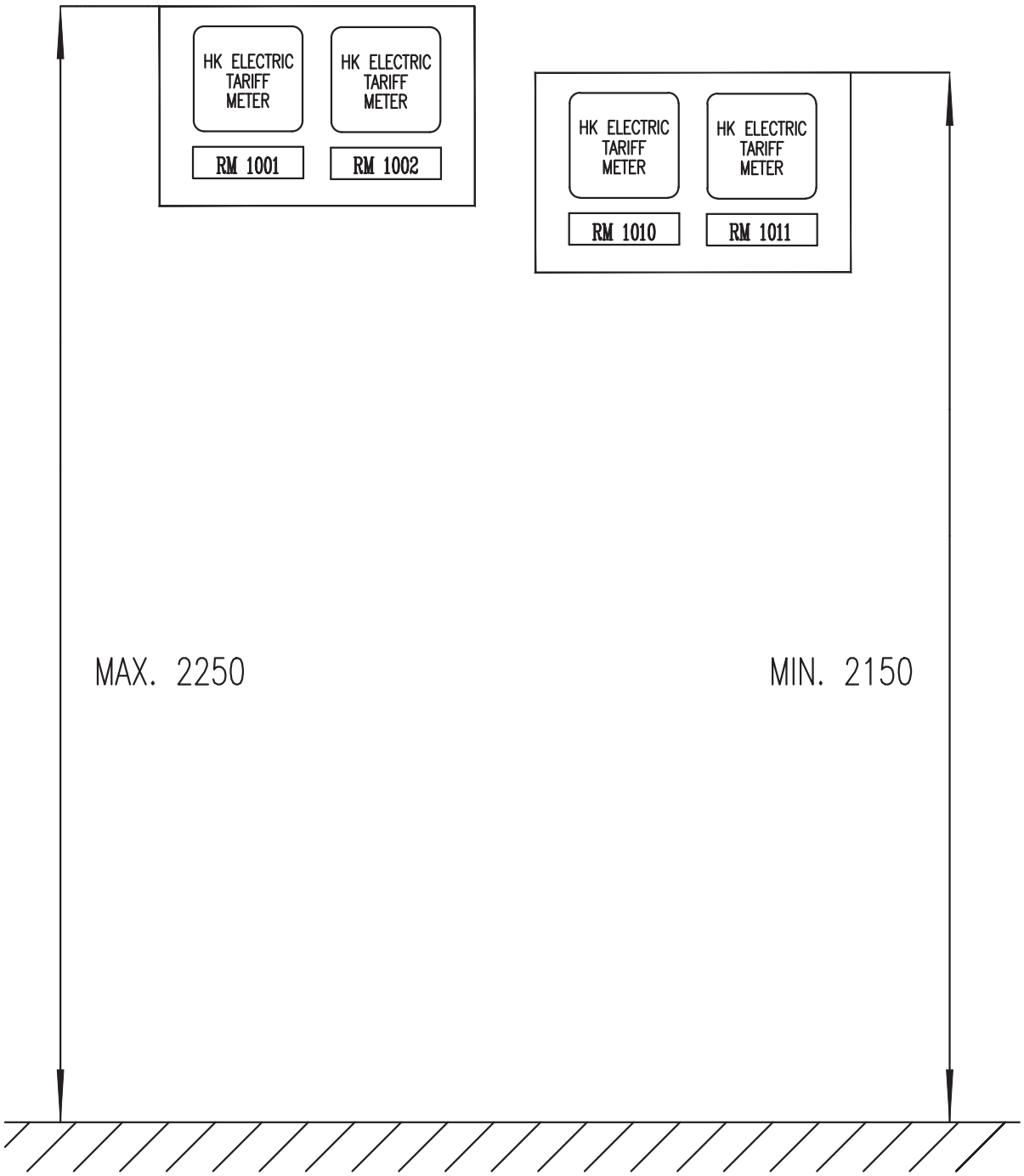

FRONT VIEW

NOTE : ALL DIMENSIONS ARE IN mm.

Drg. No. GCS/5/16

METER BOARD ARRANGEMENT FOR PUBLIC AREA

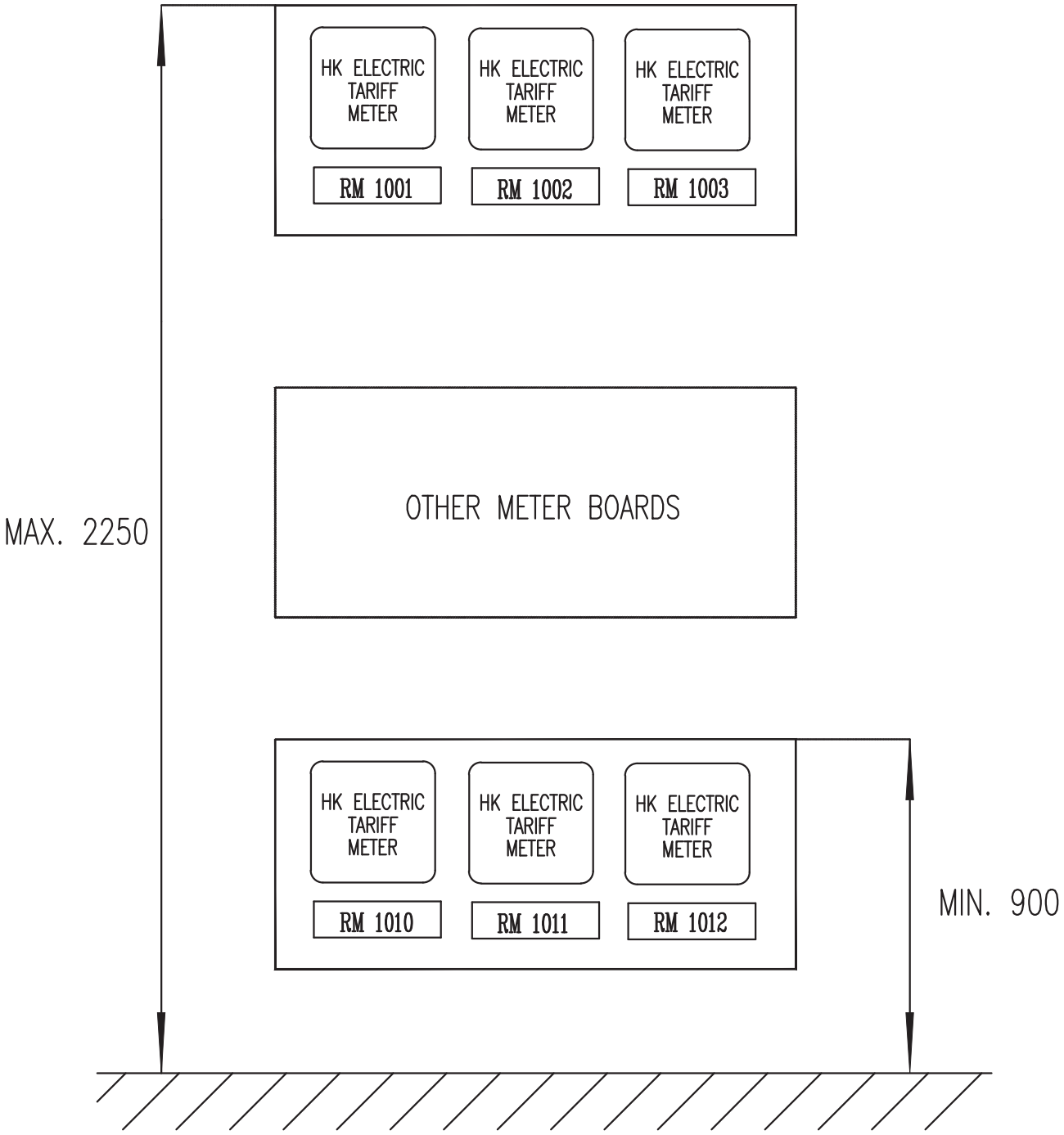

FRONT VIEW

NOTE : ALL DIMENSIONS ARE IN mm.

Drg. No. GCS/5/17

METER BOARD ARRANGEMENT FOR METER ROOM/SWITCHBOARD

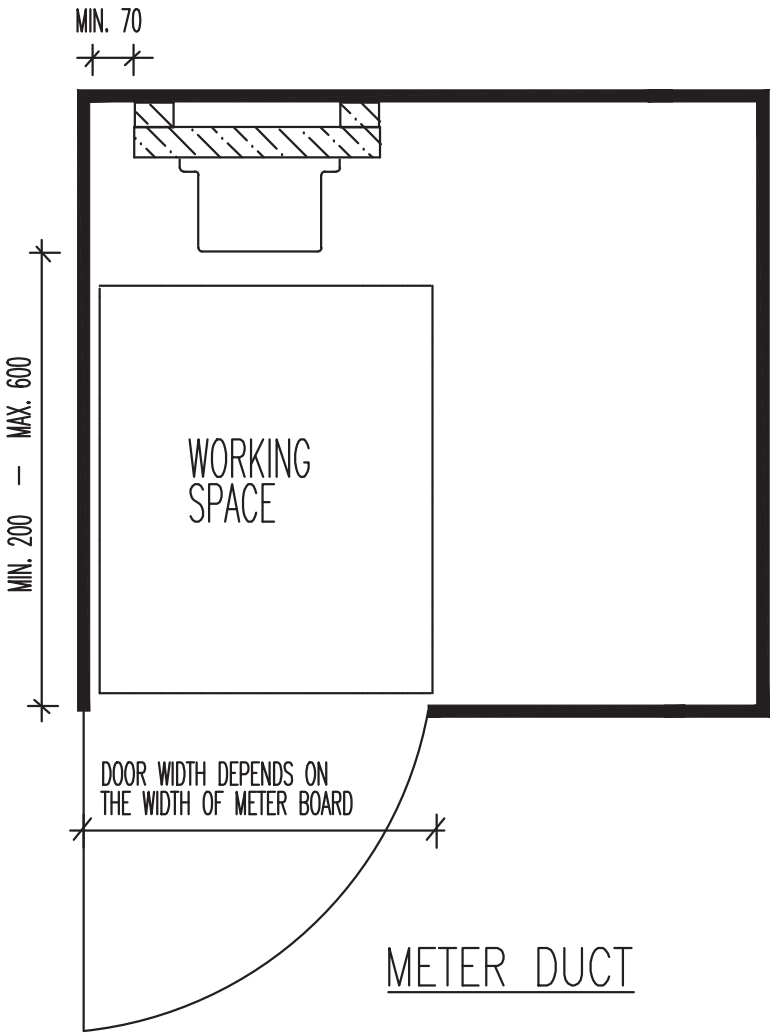

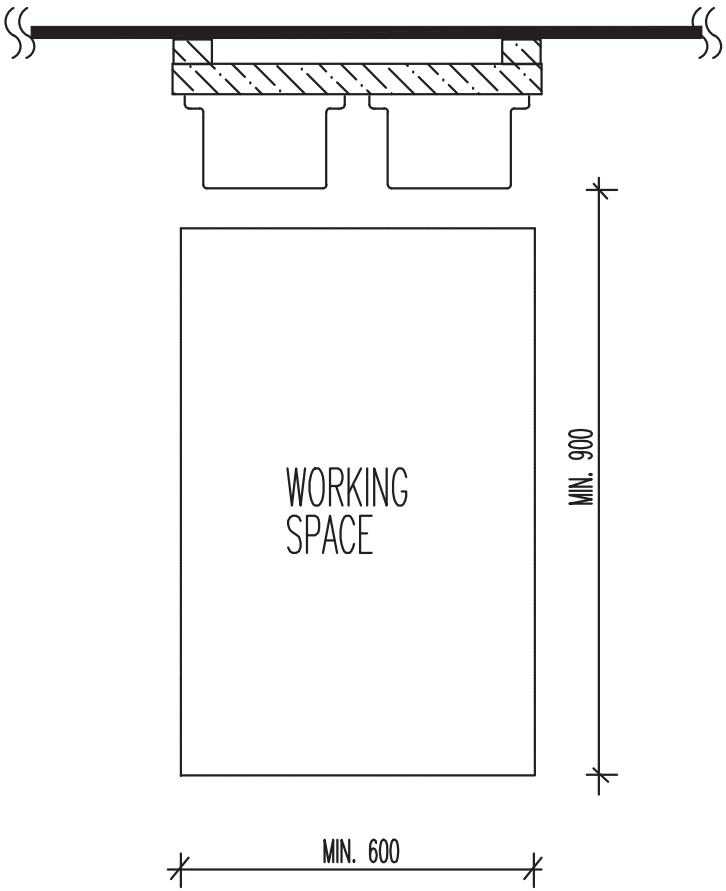

NOTE : ALL DIMENSIONS ARE IN mm.

Drg. No. GCS/5/18

MINIMUM SPACE REQUIREMENTS FOR METER DUCT/ROOM

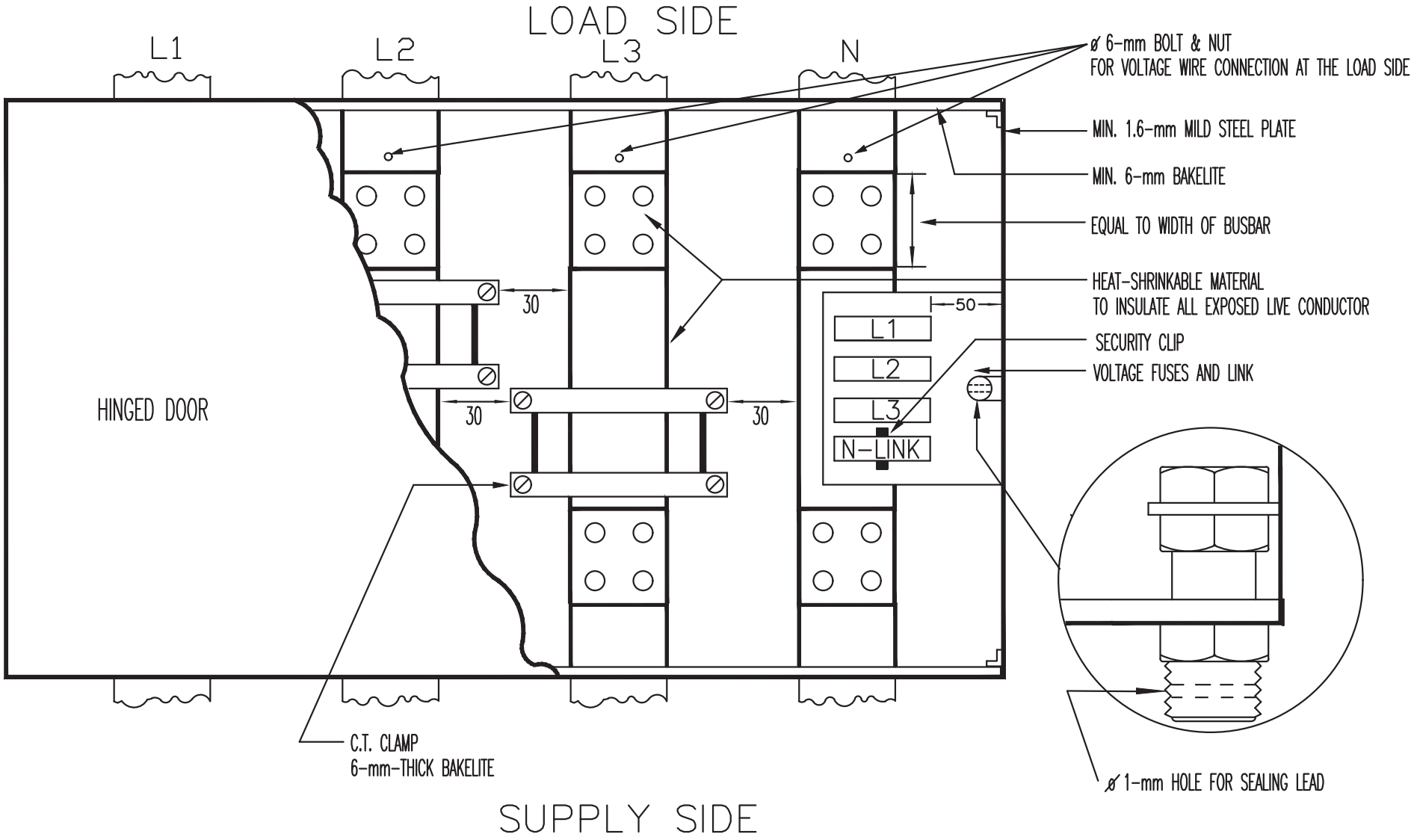

NOTES : 1. FOR C.T. CHAMBER SIZE, PLEASE REFER TO CLAUSE 5.8.
2. ALL DIMENSIONS ARE IN mm.

Drg. No. GCS/5/19

REQUIREMENTS FOR METERING CURRENT TRANSFORMER CHAMBER

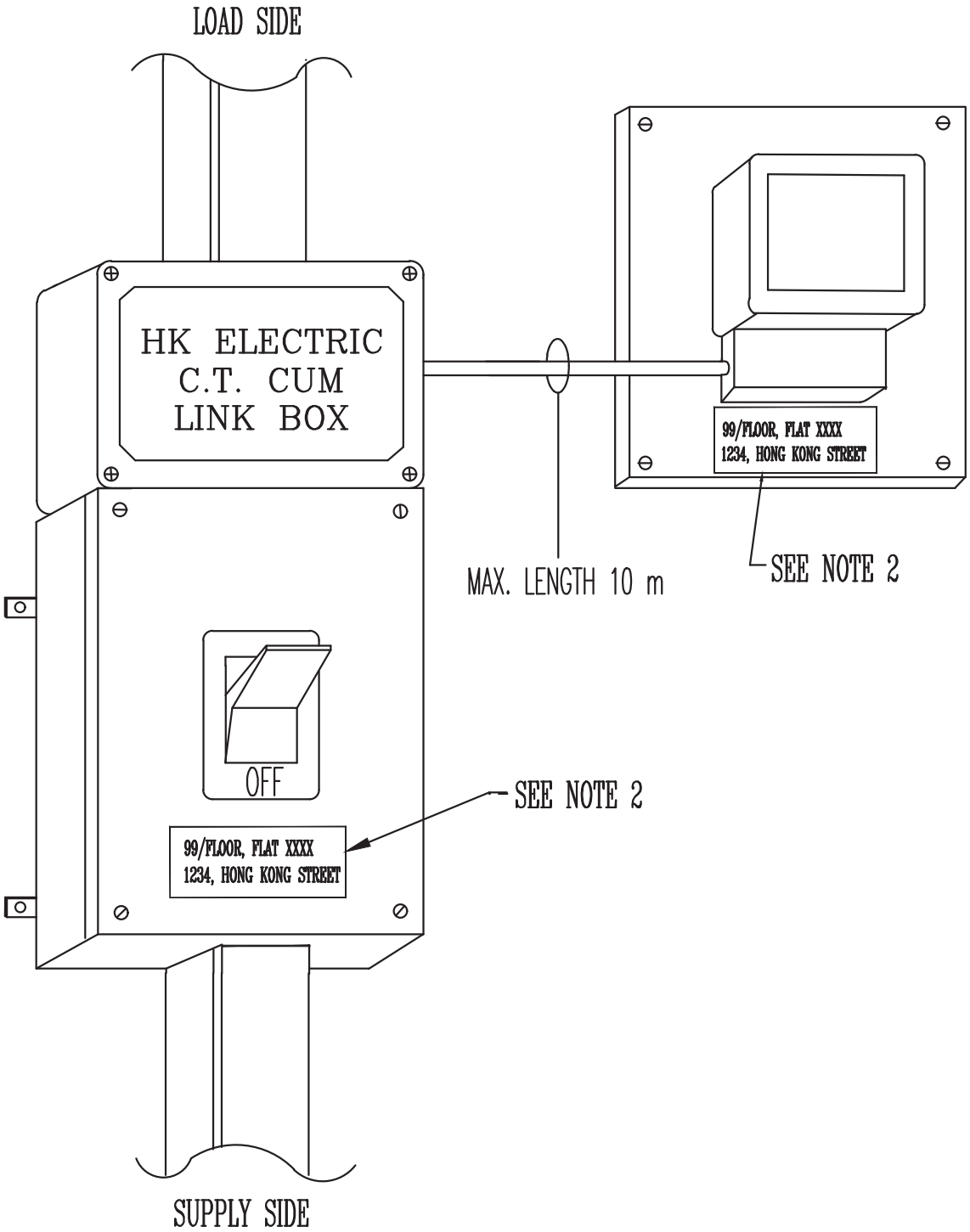

NOTES :
1. TARIFF METER, METERING C.T.s, MULTI-CORE CABLES AND C.T. CUM LINK BOX ARE PROVIDED BY HK ELECTRIC.
2. A PERMANENT, TIDY AND SECURELY FIXED FLAT / ADDRESS LABEL SHALL BE PROVIDED BY CUSTOMER.

Drg. No. GCS/5/20

METERING REQUIREMENTS FOR MAIN SWITCH RATING EXCEEDING 100 A AND UP TO 400 A

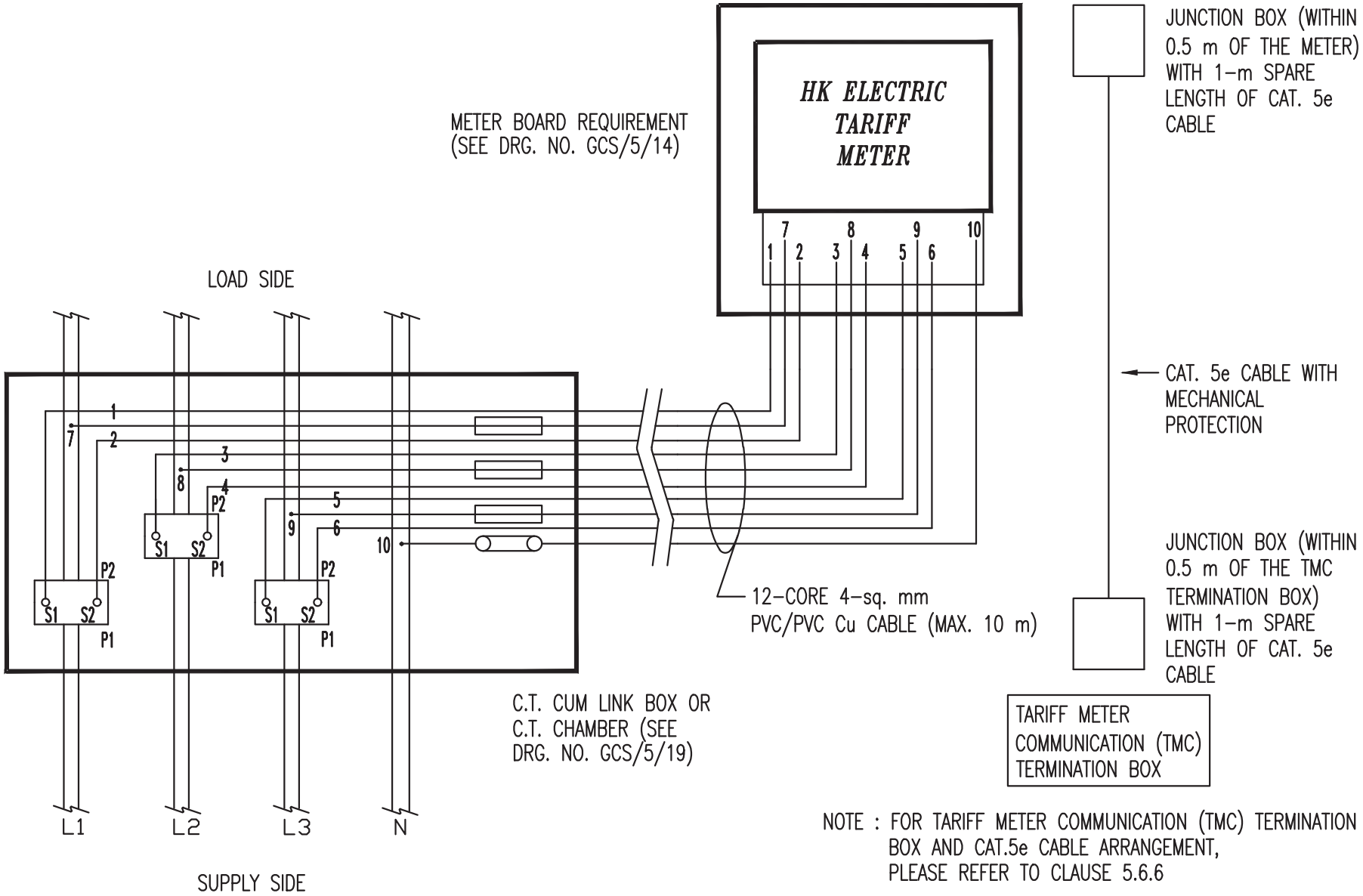

NOTE : FOR TARIFF METER COMMUNICATION (TMC) TERMINATION BOX AND CAT.5e CABLE ARRANGEMENT, PLEASE REFER TO CLAUSE 5.6.6

Drg. No. GCS/5/21

WIRING DIAGRAM FOR C.T. OPERATED METER

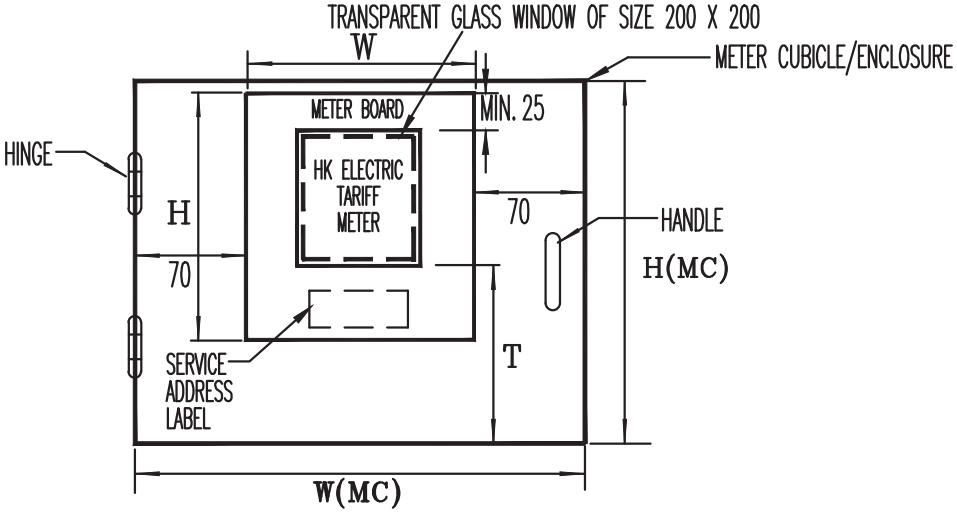

DETAIL 'A' METER CUBICLE/ENCLOSURE WITH TRANSPARENT GLASS WINDOW

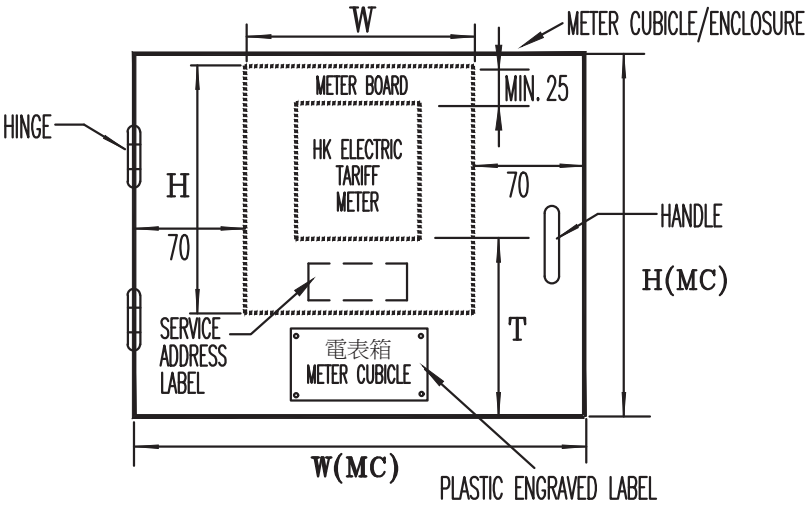

DETAIL 'B' METER CUBICLE/ENCLOSURE WITHOUT TRANSPARENT GLASS WINDOW

METER TYPES	MAIN SWITCH RATING (AMP)	MINIMUM CLEARANCE FOR METER TERMINATION	METER BOARD DIMENSIONS		METER CUBICLE/ENCLOSURE DIMENSIONS	
		T	H	W	H(MC)	W(MC)
1 - ø	⩽ 60	150	280	210	355	350
3 - ø	⩽ 100	200	430	300	515	440

NOTES :
1. THE METER CUBICLE/ENCLOSURE (INCLUDING THE TRANSPARENT GLASS WINDOW IN DETAIL 'A') SHALL COMPLY WITH THE RELEVANT FIRE REGULATIONS.
2. THE DISTANCE BETWEEN METER SURFACE TO THE HINGED DOOR AT CLOSED POSITION SHALL BE MAXIMUM 50 mm AND MINIMUM 20 mm.
3. METER CUBICLE/ENCLOSURE FOR MORE THAN ONE METER SHALL BE OF DIMENSIONS IN MULTIPLES OF UNIT PER THE ABOVE TABLE.
4. IF OTHER RELATED ELECTRICAL EQUIPMENT IS REQUIRED TO BE INSTALLED INSIDE THE METER CUBICLE/ENCLOSURE, THEN THE SIZE OF THE METER CUBICLE/ENCLOSURE SHALL BE ENLARGED ACCORDINGLY.
5. FOR DETAIL 'B', THE METER CUBICLE/ENCLOSURE SHALL BE INSTALLED AT AN EASILY ACCESSIBLE LOCATION/LEVEL TO FACILITATE MONTHLY METER READING. A PLASTIC ENGRAVED LABEL BEARING WORDS : "電表箱" AND "METER CUBICLE" SHALL BE INSTALLED AT THE METER CUBICLE/ENCLOSURE FRONT COVER. RECOMMENDED SIZE OF THE LABEL : 150 X 75 mm^2 .
6. RECOMMENDED SIZE OF ADDRESS LABEL : 120 X 60 mm^2 .
7. ALL DIMENSIONS ARE IN mm.

Drg. No. GCS/5/22

REQUIREMENTS FOR METER CUBICLE/ENCLOSURE IN EXISTING BUILDINGS

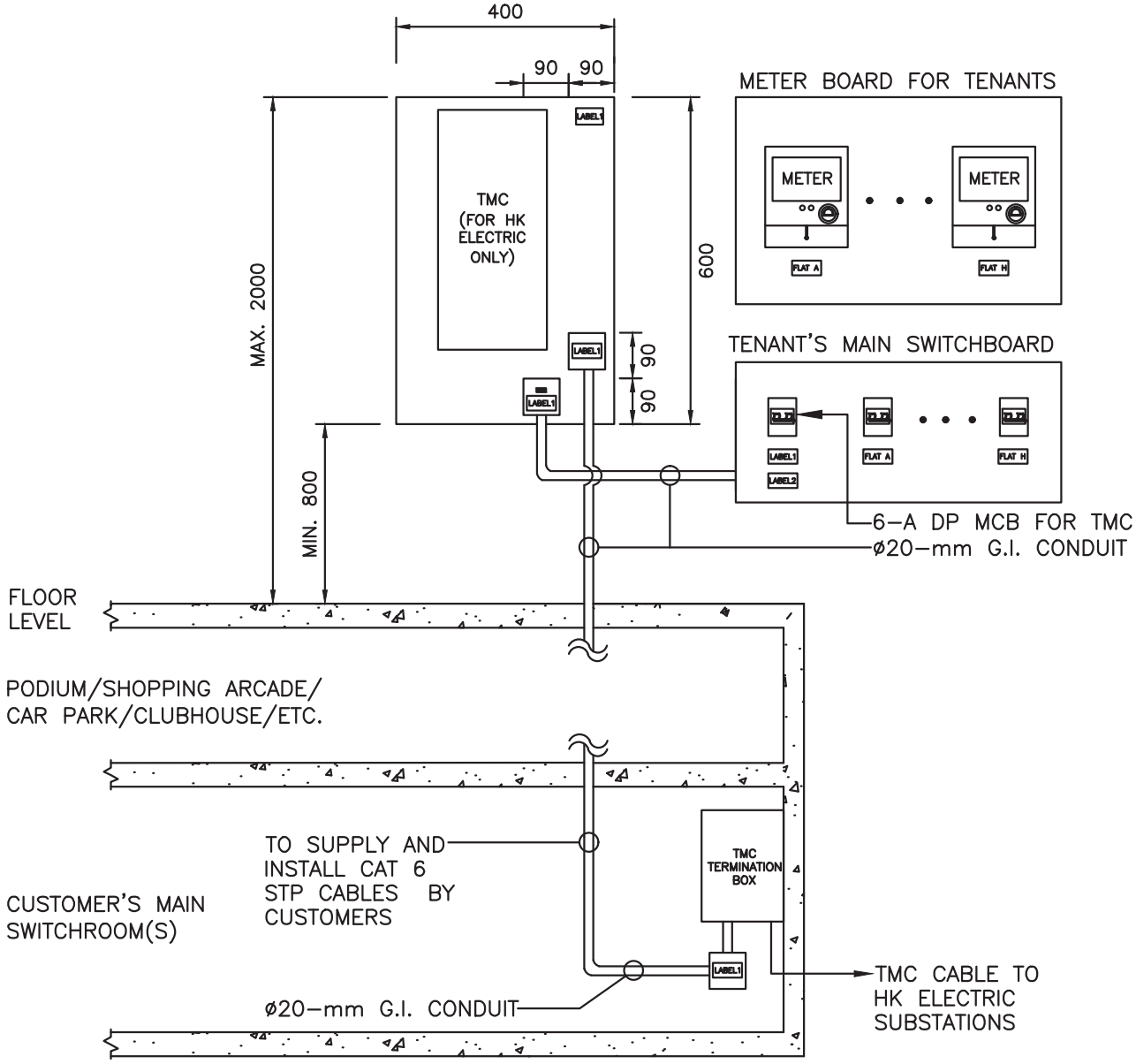

LEGEND :	DESCRIPTION :
▪	5–A FUSED CONNECTION UNIT WITH EARTHING TERMINAL
□	G.I. JUNCTION BOX

LABEL1

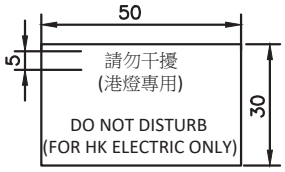

LABEL2

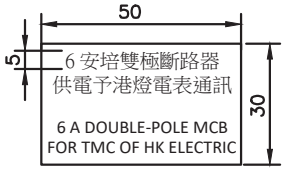

NOTE : ALL DIMENSIONS ARE IN mm.

Drg. No. GCS/5/23

FACILITIES FOR TARIFF METER COMMUNICATION (TMC) INFRASTRUCTURE - TMC/R/1A

(APPLY TO METER ROOM(S) ON THE LOWEST FLOOR)

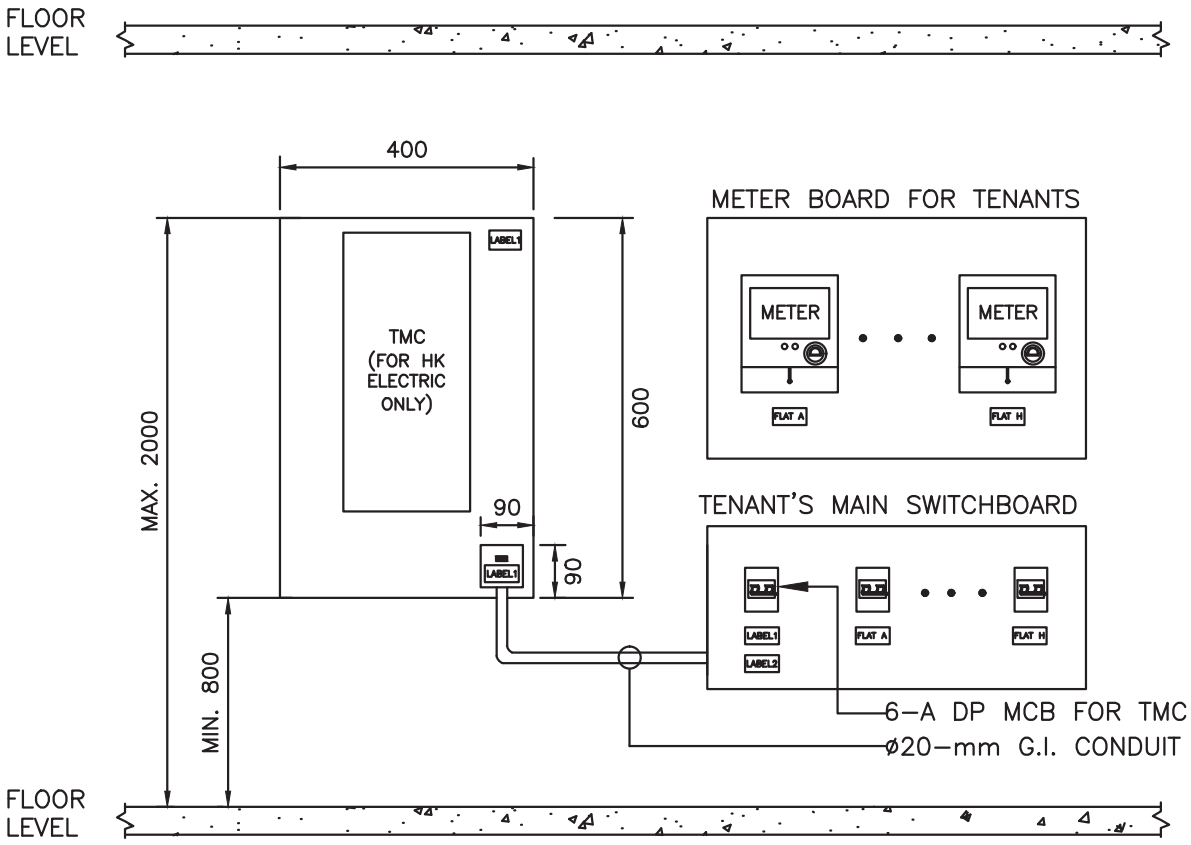

LEGEND : DESCRIPTION :

- 5–A FUSED CONNECTION UNIT WITH EARTHING TERMINAL
- G.I. JUNCTION BOX

LABEL1

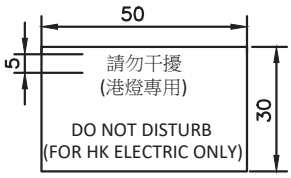

LABEL2

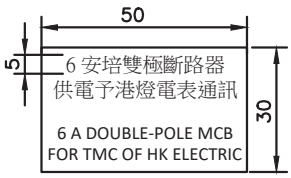

NOTE : ALL DIMENSIONS ARE IN mm.

Drg. No. GCS/5/24

FACILITIES FOR TARIFF METER COMMUNICATION (TMC) INFRASTRUCTURE - TMC/R/1B

(APPLY TO METER ROOM(S) OTHER THAN THE LOWEST FLOOR)

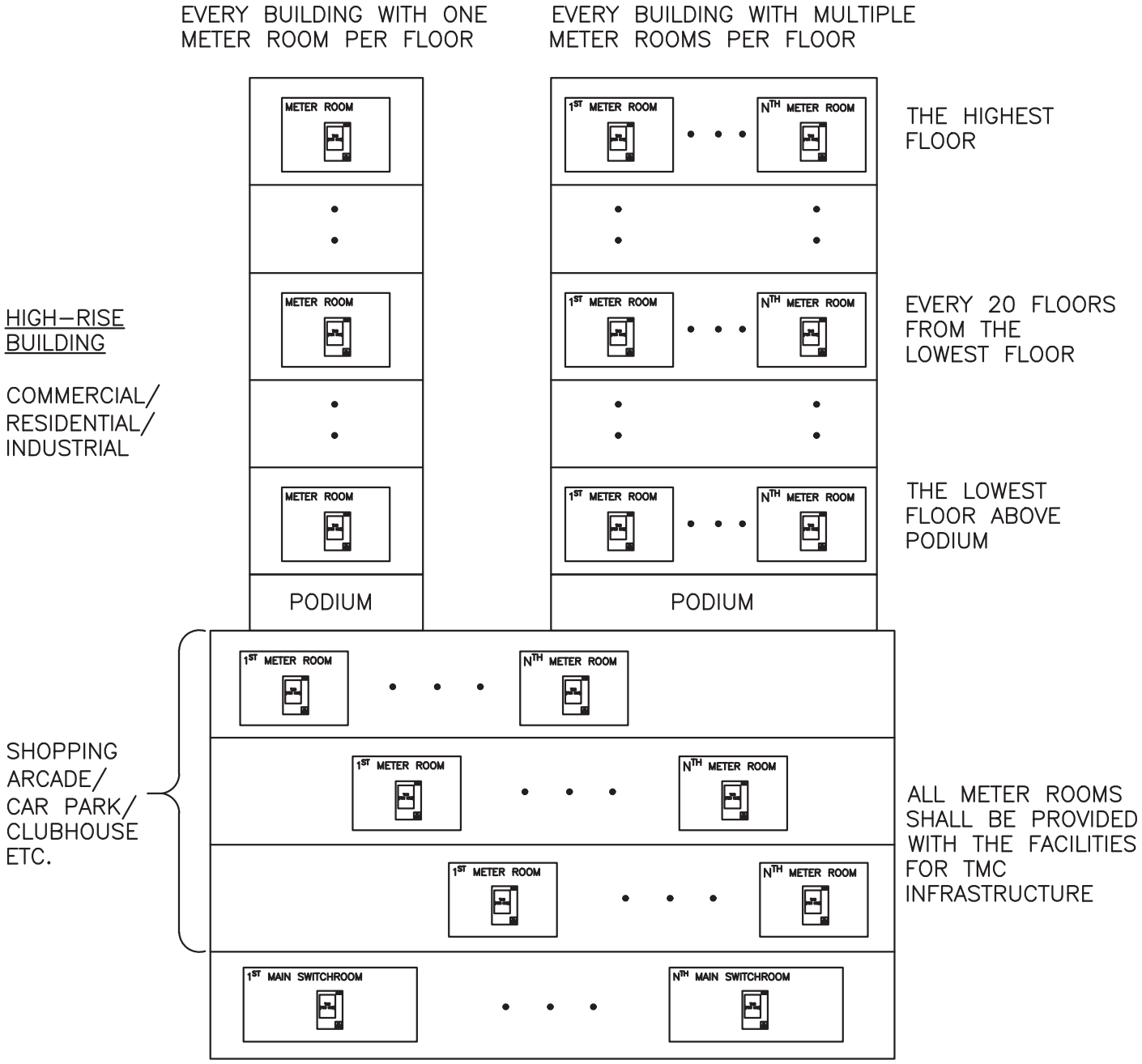

LEGEND : DESCRIPTION :

THE FACILITIES FOR TARIFF METER COMMUNICATION (TMC) INFRASTRUCTURE (REFER TO DRG: GCS/5/23 AND GCS/5/24)

Drg. No. GCS/5/25

LOCATIONS OF FACILITIES FOR TARIFF METER COMMUNICATION (TMC) INFRASTRUCTURE - TMC/R/2

Notes for Drawing Nos. GCS/5/25

1. TMC infrastructure provisions shall be installed at the following locations:

Conditions	Locations of Facilities
(I) Building with 20 floors or less	- Customer's main switchroom(s) - Meter room(s) on the top floor and lowest floor above the customer's main switchroom. **The same requirements apply to all meter rooms on the same floor.**
(II) Building with over 20 floors	- Customer's main switchroom(s) - Meter room(s) on the top floor and lowest floor above the customer's main switchroom. **The same requirements apply to all meter rooms on the same floor.** - Meter room(s) for every 20 floors above the customer's main switchroom. **The same requirements apply to all meter rooms on the same floor.**
(III) Shopping centre or building with shopping centre	- Customer's main switchroom(s) - All meter rooms for shops. For the vertical portion of the building above the podium, conditions (I) and (II) apply.

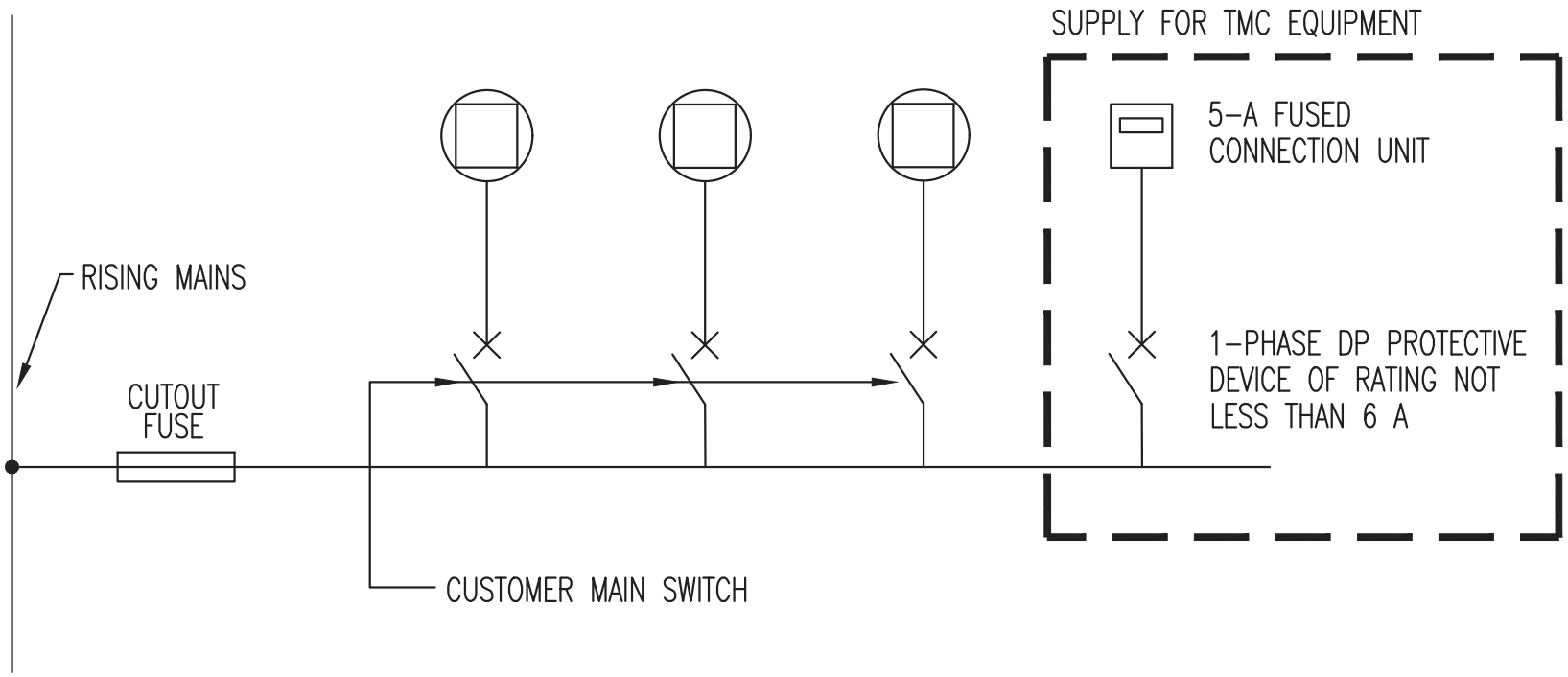

Drg. No. GCS/5/26

TYPICAL SUPPLY ARRANGEMENT FOR TARIFF METER COMMUNICATION (TMC) INFRASTRUCTURE

CHAPTER 6

GUIDELINES ON DESIGN OF ELECTRICAL INSTALLATION

CHAPTER 6

GUIDELINES ON DESIGN OF ELECTRICAL INSTALLATION

6.1 Introduction

1. An assessment shall be made of any characteristics of equipment likely to have harmful effects upon other electrical equipment or other services, or be harmfully affected by them, or likely to impair the supply.

2. It is the responsibility of the customer's REC/REW to ensure that design of the electrical installation complies with HK Electric Supply Rules, the latest edition of Code of Practice for the Electricity (Wiring) Regulations and other relevant Government Ordinances and Regulations.

3. In accordance with the Code of Practice for the Electricity (Wiring) Regulations Code 18B, any person who wishes to have his electricity supply increased over and above the approved loading, or extended beyond the premises to which the supply is originally intended, should obtain prior approval from the electricity supplier concerned before any alteration or addition is carried out.

4. In accordance with the Code of Practice for the Electricity (Wiring) Regulations Code 18A(c), in the case of an alteration or addition to an installation which is connected to rising mains, the owner of the installation should, before commencing any alteration or addition, obtain agreement from the owner of the rising mains by completing form "Confirmation of Agreement from Owner of Rising Mains for Connection of Electrical Installation with an Increased Current Demand" (C.I. 140) provided by Electricity Supplier if the new current demand of the installation after the alteration or the addition will exceed the existing approved loading before the alteration or addition is carried out on the installation.

5. For installations taking supply directly from HK Electric supply point, a standard enquiry and reply form (C.I. 141) shall be used for enquiry of approved loading of the installation.

6. Under normal circumstances HK Electric will not comment on the customer's design during the planning stage but will inspect the installation before connection of supply.

7. We would try to highlight some interface areas where special attention from the designers are required. Drawings are also provided to illustrate the requirements.

6.2 Interconnection Facilities of Customer's Installation

1. Between HK Electric 11-kV/22-kV Line Switch Cum Metering Unit and Customer 11-kV/22-kV Main Switch

   a. For 11-kV supply, the 11-kV cables between HK Electric 11-kV line switch cum metering unit and customer 11-kV main switch shall be provided and installed by REC/REW. The 11-kV cables shall be of single-core construction, conductor of either compacted aluminum or compacted copper, circular in shape with 185-mm^2 cross-sectional area, XLPE insulated, with semi-conducting conductor screen and semi-conducting insulation screen, copper wire screen and MDPE or PVC outer sheath to IEC60502. The insulated core outer diameter of the cable should be within 27.8 mm to 31.5 mm and the outer diameter of the cable should not exceed 45 mm. The 11-kV cables shall be suitable for plug-in type termination of outer cone design. The customer shall provide cross-sectional diagram with detailed dimensions of the cable for HK Electric reference and approval.

      The REC/REW may use alternative types of 11-kV cables, but he should first check with our Distribution Planning Department to see if the cables will be suitable for termination onto HK Electric 11-kV line switch cum metering unit by using plug-in type termination.

   b. For 22-kV supply, the 22-kV cables between HK Electric 22-kV line switch cum metering unit and customer 22-kV main switch shall be provided and installed by REC/REW. The 22-kV cables shall be of single-core construction, conductor of either compacted aluminum or compacted copper, circular in shape with 185-mm^2 cross-sectional area, XLPE insulated, with semi-conducting conductor screen and semi-conducting insulation screen, copper wire screen and MDPE or PVC outer sheath to IEC60502. The insulated core outer diameter of the cable should be within 27.8 mm to 31.5 mm and the outer diameter of the cable should not exceed 45 mm. The 22-kV cables shall be suitable for plug-in type termination of outer cone design. The customer shall provide cross-sectional diagram with detailed dimensions of the cable for HK Electric reference and approval.

      The REC/REW may use alternative types of 22-kV cables, but he should first check with our Distribution Planning Department to see if the cables will be suitable for termination onto HK Electric 22-kV line switch cum metering unit by using plug-in type termination.

c. Double-point earth bonding will be applied onto the section of cables from HK Electric 11-kV/22-kV line switch cum metering unit to customer main incoming 11-kV/22-kV switch. Customer's REC/REW shall earth the metallic screen or armouring at their side.

d. HK Electric will provide the necessary materials and labour to terminate the cables at HK Electric 11-kV/22-kV line switch cum metering unit and the customer shall allow an extra length of 1.5 metres of the single-core 11-kV/22-kV cables measuring from the bottom of HK Electric 11-kV/22-kV line switch cum metering unit for HK Electric to prepare the termination.

e. The termination of customer's 11-kV/22-kV cables onto HK Electric 11-kV/22-kV line switch cum metering unit will be performed by HK Electric on behalf of the customer and a service charge will be chargeable to the customer. The cable termination and its associated accessories will become the property of the customer.

f. The termination of 11-kV/22-kV cables onto customer's 11-kV/22-kV main incoming switchgear shall be the responsibility of REC/REW.

2. HV Customer Supplied via One 11-kV/22-kV Supply Point

Where a building is supplied via one 11-kV/22-kV supply point only, the customer is recommended applying for one more supply point in order to facilitate the maintenance of customer’s installation or restoration of supply in case of contingency.

3. HV Customer Supplied via More Than One 11-kV/22-kV Supply Point

a. Where a building is supplied via more than one 11-kV/22-kV supply point, the customer is recommended installing interconnection(s) among the 11-kV/22-kV supply points for better security of electricity supply. All incoming and interconnection switchgear/circuit breakers shall be of 3-pole type interrupting all live conductors which shall be mechanically and electrically interlocked to prevent HK Electric 11-kV/22-kV sources from operating in parallel. Castell Key interlock can be considered as a kind of mechanical interlock.

b. Where an LV interconnection between different 11-kV/22-kV supply points is provided for customer's installation, the customer shall design and install the LV interconnection in such a way so as to avoid undesirable fluctuation of 11-kV/22-kV load and/or undesirable transfer of load among the 11-kV/22-kV supply points.

c. To prevent sudden transfer of large block load among the 11-kV/22-kV supply points, which could overload HK Electric network and result in further loss of supply, locking facilities on the customer's switches which are interconnecting different 11-kV/22-kV supply points are required. These locking facilities should only be operated by HK Electric authorised persons including in the event of contingency.

In general, customer should arrange padlocks at the electrical control switch and the manual operating switch of the customer's 11-kV/22-kV interconnection switches.

The customer should provide and install key boxes, one for each interconnection switch. The key boxes should be installed at a conspicuous location inside the customer's switchroom as close to the respective interconnection switches as possible but in general should not be farther than 3 metres from the respective interconnection switches. The layout plan of the key boxes should be submitted for HK Electric prior approval.

The keys of padlocks which are applied on the interconnection switches should be kept inside the key boxes respectively. HK Electric standard locks will be applied to the key boxes. The customer should arrange bilingual labels at the concerned 11-kV/22-kV interconnection switches and on the wall above the key boxes to remind the customer's operational staff the requirement to approach HK Electric to unlock the 11-kV/22-kV interconnection switches before load transfer. Details of the labels and the key boxes are shown in Drg. Nos. GCS/6/01 and GCS/6/02 respectively.

d. To avoid overloading HK Electric 11-kV/22-kV network, in case of contingency or during maintenance of customer's installation, HK Electric may only allow part of the load to be transferred among the 11-kV/22-kV supply points at certain time slot to be agreed with the customer. The customer should contact Customers Emergency Services Centre in case of contingency, or Construction & Maintenance Department at least 2 weeks before the planned maintenance date for the necessary arrangements.

4. Between HK Electric Transformers

a. Installation shall be directly connected to HK Electric transformers via transit blocks or single-core cables. The examples of cable sizes for the cables connecting between HK Electric transformers and customer main switch are shown in Drg. No. GCS/6/03.

b. For supply directly obtained from two or more units of HK Electric transformers within the same substation, the incoming low voltage switchgears at the customer's main switchroom should be interconnected via bus-section switch(es) in order to maintain a high reliability of electricity supply to the customer. The arrangements shown on Drg. Nos. GCS/6/04, GCS/6/05 and GCS/6/06 are for REC/REW's reference. REC/REW shall provide a schematic diagram showing the proposed arrangement of their main incoming switchgear to Distribution Planning Department of HK Electric before the substation layout design could be finalized.

c. All interconnecting devices including the bus-section switch shall be of 4-pole type with mechanical and electrical interlocks.

d. Castell Key interlock can be considered as a kind of mechanical interlock.

5. Between HK Electric Supply and Customer's Generator

a. Changeover device used for interconnection between the normal and standby sources shall be of 4-pole type with mechanical and electrical interlocks.

b. Local isolation switch shall be installed after the changeover device.

6. Between LV Service Cables

Interconnection facilities between LV service cables will not be allowed.

6.3 Customer 11-kV/22-kV Main Switch

The 11-kV/22-kV main switch shall incorporate the following basic requirements:

1. The 11-kV main switch, i.e. the circuit breaker, used to receive supply directly from HK Electric supply source, should be rated for use at 11 kV and with rated short time withstand current of 18.4 kA rms for 3 seconds. The lightning impulse withstand voltage should not be less than 75 kV peak.

   Means of protection shall grade properly with HK Electric infeed requirements as shown in Drg. Nos. GCS/4/01 and GCS/4/02.

2. The 22-kV main switch, i.e. the circuit breaker, used to receive supply directly from HK Electric supply source, should be rated for use at 22 kV and with rated short time withstand current of 25 kA rms for 3 seconds. The lightning impulse withstand voltage should not be less than 125 kV peak.

   Means of protection shall grade properly with HK Electric infeed requirements as shown in Drg. Nos. GCS/4/03 and GCS/4/04.

3. The overcurrent setting of the main circuit breaker shall normally not exceed 200 A and should normally be of draw-out type and lockable at that position, rated for fault making and breaking, and shall have an earthing switch to earth the incoming cable. Fixed type circuit breaker in conjunction with an isolator which is mechanically interlocked with the circuit breaker may be used provided that there is clear indication between the service position and the isolated position and can be lockable at the isolated position.

4. Interlock facilities shall be provided between the circuit breaker, the earthing switch and the isolator.

5. Safety shutter shall be provided at the switchgear spouts.

6. The earthing switch at the main incomer shall be lockable at open and closed position and of fault making type. The earthing switch shall only be operated by mechanical means when it is closed to circuit earth position.

7. HK Electric will lock the earthing mechanism of the customer's 11-kV/22-kV incomers earth switch to maintain it in open position in order to avoid inadvertent closing of HK Electric 11-kV/22-kV supply to earth without the permission from HK Electric. The customer's 11-kV/22-kV incomers should provide necessary provisions to accept the application of either one of the HK Electric provided standard locks as shown in Drg. No. GCS/6/07 to lock the earthing mechanism in open position. The customer should arrange bilingual label(s) at the concerned customer main switch(es). Details of the label are shown in Drg. No. GCS/6/08.

6.4 Nomenclature of Customer's 11-kV/22-kV Apparatus

1. Customer Main Switches

   a. The nomenclature of the customer main switches shall be numbered in consecutive ascending order in one direction and in the format of:

      "***####SNYYYYYY***"

      where #### is customer defined 4-alpha-numeric character;
      SNYYYYYY is the Supply Number assigned by HK Electric.

      The customer switch destination shall be in the format of:

      "TO : ***ABC S/S SW XX SNYYYYYY***"

      where ***ABC S/S*** is the HK Electric substation name;
      SW XX is the remote HK Electric switchgear number;
      SNYYYYYY is the Supply Number assigned by HK Electric.

   b. The REC/REW shall confirm that the agreed wordings are on the front panel of the corresponding switchgear.

2. Labelling of Customer's Incomer

   Under certain circumstances, the HV supply incoming cable could be terminated either to the front or rear spouts of the customer main switch. In order to identify the position of HV supply incoming cable connection, the following are recommended:

   a. Bilingual label "Caution – HV supply incoming cable is connected to front (or rear) spouts" with Chinese translation "小心 – 高壓供電電纜接駁到前（或後）插座" shall be secured onto the switch panel to which the HV supply incoming cable is connected.

b. Identification label “HV Supply Incoming Cable，高壓供電電纜” shall be painted on the shutter of spouts to which the HV supply side cable is connected.

6.5 Customer LV Main Switch

1. General

a. A customer main switch shall be installed and connected immediately before HK Electric meter.

b. Means of protection shall grade properly with HK Electric infeed as shown in Drg. No. GCS/4/05.

c. A customer main switch or circuit breaker shall be provided for every customer's installation which shall interrupt all live conductors of the installation. The main switch or circuit breaker shall be readily accessible to the customer and shall incorporate:

i. means of isolation and switching,

ii. means of protection against overcurrent, and

iii. means of protection against earth leakage.

For 3-phase 4-wire supply, a linked switch or linked circuit breaker may be arranged to disconnect the phase conductors only and in such case, a link shall be inserted in the neutral conductor and securely fixed by bolts or screws.

For single-phase supply, the main switch shall be of double-pole type interrupting both live and neutral conductors.

d. The means of isolation and switching shall be:

i. a device selected and installed in such a way as to prevent unintentional reclosure,

ii. capable of cutting off the full load current of the whole installation from supply,

iii. provided with clearly and reliably indicated ON & OFF position.

e. The means of protection against overcurrent shall be a device capable of breaking (and for circuit breakers, making) any overcurrent up to and including the prospective short circuit current at the point where the device is installed. Such device may be circuit breaker incorporating overload release, or fuse, or circuit breaker in conjunction with fuses.

Where supply is taken directly from HK Electric transformer or underground cable, the main switch or circuit breaker shall have a short-circuit breaking capacity of 40 kA symmetrical at low voltage.

f. The means of protection against earth leakage shall be by earthed equipotential bonding and automatic disconnection of supply. The characteristics of the protective device for automatic disconnection and the earth fault loop impedance at the main switch shall be co-ordinated so that disconnection is achieved within 5 seconds during an earth fault.

g. A circuit breaker used to receive supply from HK Electric transformer shall normally be of draw-out type. An isolator may be used in conjunction with fixed type circuit breaker provided that it is mechanically interlocked with the circuit breaker.

h. Where the supply is designed to be taken from more than one transformer, interconnection facilities between main incoming circuit breakers are recommended and should be arranged in accordance with HK Electric requirements. All incoming and interconnection circuit breakers shall be of 4-pole type interrupting all live conductors (i.e. phase and neutral) and mechanically and electrically interlocked to prevent HK Electric transformers from operating in parallel.

Where a standby generator is installed, a mechanically and electrically interlocked 4-pole changeover device shall be used for interconnection between the normal and standby sources to ensure that neutral unbalance and fault currents return to the correct source of supply.

i. Where a customer's installation is supplied from an overhead line system, the installation shall be protected against earth leakage by RCD.

2. Building Main Switch

A main switch shall be installed to control all the outgoing installations in a building supplied from the same incoming supply.

3. Main Switch for Communal Installation

A main switch shall be installed to control the communal installation of the building.

6.6 Changeover Arrangement for Fire Services Installation Supplied from the Same Source

1. 4-pole changeover device should be installed. Infeed circuits and outgoing circuits may be of TP&N arrangement.

2. Local isolation switch should be installed after the changeover device.

6.7 Rising Mains Installation

1. Any building of more than four floors including the ground floor and designed for occupation of more than one customer shall be provided with 3-phase 4-wire electrical rising mains with three-phase and neutral tee off at each floor unless otherwise agreed by HK Electric.

2. Each rising mains installation shall be protected against overcurrent and earth leakage and shall be equipped with suitable means of isolation.

3. In premises intended for multiple occupations, separate riser earthing conductors shall be provided to earth all the units. The minimum cross-sectional area of riser earthing conductor shall be 70 mm^2 for copper and 150 mm^2 for aluminum.

4. Size of rising mains shall match with the current rating of the corresponding riser switch at the origin of the circuit and shall be reasonably designed to cater for the demand. Where the riser switch is located outside the building served, a local riser switch shall be provided.

5. Instantaneous type RCD shall not be used as multi-customer riser switch.

6. Size of neutral conductor of 3-phase 4-wire rising mains shall not be less than that of the phase conductor unless otherwise agreed.

6.8 Electrical Design for Residential Flats

1. The following recommendations are prepared to assist developers, architects, E&M consultants and contractors in assessing the electricity demand of residential flats so that adequate provision of electricity supply can be made to meet the need of modern homes.

2. Electricity supply to residential flats is arranged in either single-phase or three-phase. An installation of which the approved loading is less than 60 A should normally be arranged to receive single-phase supply. An installation requiring more than 60 A should be designed to receive three-phase supply.

3. In the light of the rise in standard of living in the recent years, the aspiration to improve the quality of living homes in our community is getting higher. Nowadays, a much wider range of electrical appliances are available in the market than before, and many of these appliances such as electric water heaters, kitchen apparatus, etc., are increasingly popular in modern households. Therefore, it is a good design practice to ensure that adequate capacity of electricity supply is provided for modern residential flats so that the occupants may avail themselves of the modern range of electrical appliances to enjoy quality living standard. In addition, good design not only increases the value and the status of the property but also avoids unnecessary and tedious modification/reinforcement work afterwards, which is often costly and time consuming.

4. Taking into consideration the range of electrical appliances commonly used nowadays in modern households, it is reckoned that the total load could easily exceed 60 A single-phase for residential flat. In view of the above, we recommend developers, architects, E&M consultants and contractors adopt three-phase electricity supply for residential flats.

5. When an installation is designed to receive three-phase supply, the phase connection of different types of appliances (e.g. air conditioners, water heaters, cooker switches and socket outlets etc.) should be evenly spread among the three phases such that the electricity demand from a particular type of appliance between adjacent flats on the same floor or within the building will not be concentrated at one particular phase at a certain time of the day, such as TV peak hours or meal preparation hours.

6. Apart from ensuring an adequate capacity of electricity supply, the design for the residential flats to receive three-phase supply also has the following advantages:

   a. It minimizes unbalanced load condition and overloaded condition of the communal installations, such as lateral mains and/or rising mains due to unbalanced connection and/or unbalanced load patterns that could often occur with single-phase installations. This is because load balancing can be more easily achieved with three-phase installations in the design and construction stage. Even in the exceptional circumstances when subsequent load balancing work is required, the work will be much simpler with three-phase installations.

   b. It reduces energy loss in the neutral conductors when compared with single-phase installations.

   c. It enables the occupants to use three-phase electrical appliances at home.

7. These recommendations are for general reference only. They shall not circumvent or precede any requirements in HK Electric Supply Rules, the latest edition of Code of Practice for the Electricity (Wiring) Regulations and other relevant Government Ordinances and Regulations. The responsibility of design of an electrical installation shall still solely rest with the designer.

6.9 Electrical Design for Restaurants

1. The following recommendations are to assist developers, architects, E&M consultants and contractors to assess the demand of restaurants applying for the provision of electricity.

2. Today, there is a wide range of electric kitchen equipment available on the market, and many are increasingly popular with industry practitioners. It is, therefore, a good design practice to ensure that there is an adequate supply of electricity provided for restaurants wishing to enjoy the wide range of electric kitchen equipment and an improved environment. Besides, having a good design not only increases the value and status of the restaurant, but also avoids unnecessary and tedious modification/reinforcement works later as these are often costly and time-consuming.

3. When considering the range of electric kitchen equipment commonly used and the usable floor area of such restaurants, we recommend the following main switch rating requirements:

(FOR REFERENCE ONLY)

Table for Main Switch Current Rating of Fully Electric Restaurant

Floor Area Range (Usable Floor Area)		*Main Switch Rating (A), 3-phase		
m^2	ft^2	Chinese Restaurant	Fast Food Shop	Asian Cuisine/ Western Restaurant/ HK Style Cafe
185.8 or below	2,000 or below	300	150	200
185.9 to 232.3	2,001 to 2,500	400	250	250
232.4 to 278.7	2,501 to 3,000	500	300	300
278.8 to 325.2	3,001 to 3,500	500	400	400
325.3 to 371.6	3,501 to 4,000	600	500	500
371.7 to 464.5	4,001 to 5,000	800	600	600
464.6 to 557.4	5,001 to 6,000	800	Please contact 2510 2701 for enquiry	
557.5 to 743.2	6,001 to 8,000	1000		
743.3 to 929.0	8,001 to 10,000	1250		
Above 929.0	Above 10,000			

* Remarks:

(i) The electrical demands for different floor areas listed above are by no means exhaustive.

(ii) Electrical demand can also vary according to the different equipment or electrical appliances used, and whether air conditioning is provided by a centralized system within the building.

4. For additional information on commercial kitchen equipment, please contact our hotline at 2510 2701.

5. These recommendations are for general reference only. They shall not circumvent or precede any requirements in HK Electric Supply Rules, the latest edition of Code of Practice for the Electricity (Wiring) Regulations and other relevant Government Ordinances and Regulations. The responsibility of design in an electrical installation shall still solely rest with the designer.

6.10 Earthing

1. The customer is required to provide his own effective earthing system, including a connection to earth electrodes, for its protection against earth fault currents and dangerous earth leakage currents.

2. The sheath of 11-kV/22-kV incoming cables shall be bonded to earth at customer side as well as HK Electric side.

3. If the customer main earthing system is bonded to HK Electric main earthing system, an insulated disconnection link as shown on Drg. No. GCS/6/09 is recommended for the provision of disconnection of the bonding conductor.

6.11 Limit on Length of Customer's Interconnecting Installation

The following limits shall be strictly adhered to in designing the interconnecting equipment between HK Electric supply point/position and the customer main switch:

HK Electric Supply Position	Interconnecting Equipment (by Customer)	Limits on Length of Customer's Interconnecting Installation
1. 22-kV Line Switch Cum Metering Unit	Cable	20 m
2. 11-kV Line Switch Cum Metering Unit	Cable	20 m
3. LV Busbar	Transit Block & Busbar/Cable	10 m
4. LV Isolator	Cable	20 m
5. LV Service Cutout	Cable	3 m (Main switch & cutout shall be in the same compartment)

6.12 Electromagnetic Interference in Substations

The magnetic field generated from the current in busbars or single-core cables in substations would cause electromagnetic interference, which may be of concern to tenants, occupants and/or users of the immediate vicinity. In view of this, we recommend the architects and E&M consultants implement the following arrangements in their design to minimize the interference caused by the magnetic field generated from the proposed substations:

1. Architects and E&M consultants should arrange all the substation walls, ceiling and floor to be screened off by metallic sheet at construction stage.

2. Architects and E&M consultants should incorporate in the design of an increased headroom at the floor where the proposed substation is situated so as to reduce the interference to the floor above. Similarly, the headroom of the floor just below the substation should be increased.

3. Architects and E&M consultants should inform the tenants, occupants and/or users at the floors just above and below the substations of the possibility of electromagnetic interference right at the first occupation.

4. Since the magnetic field generated by the customer's high current carrying conductors, e.g. the rising mains from the switchroom, will also cause electromagnetic interference, architects and E&M consultants are advised to check at the design stage if there is any area that would be affected by the customer's installations and carry out the necessary precautionary arrangements accordingly. Suggestions for design and installation of LV single-core cables to minimize electromagnetic interference is shown on Drg. No. GCS/6/10.

6.13 Sequence of Inspections for Multi-Customer Installations

In a multi-customer building, there are many cases that certain installations must be in order before inspection of the other installations. In general, the sequence of inspections shall be communal supply, tenant risers and then individual customer installations. Typical examples on these cases, the correct sequence and scope of inspections are shown on Drg. Nos. GCS/5/04 to GCS/5/13. The customer may contact our Customer Installation Department, on 9th Floor, Electric Centre, 28 City Garden Road, North Point, Hong Kong or by calling 2887 3455 for further assistance.

6.14 Supply Arrangements for Residential and Commercial Loads in a Building

From time to time, in a complex building comprising both residential and commercial customers, there are often difficulties for the residential and commercial customers to reach a mutual agreement on the electricity shutdown schedule to carry out electrical maintenance works. To facilitate the future maintenance work of the customer's installation for a residential-cum-commercial building, it is highly recommended that the electrical consultant/designer should separate the electrical installations of the residential and commercial loads as shown in Drg. No. GCS/6/19. The two installations will be fed by different HK Electric sources. By doing this, the residential and commercial loads can be shut down independently of each other for the convenience of each category of customers. Our engineers will be pleased to discuss with you and offer further assistance in this respect. Please contact us in the early design stage so that this arrangement can be duly incorporated.

6.15 Separation of Lighting Supplies for Department Store/Shopping Mall

Interior lighting is essential to the operation of a department store/shopping mall and a complete loss of lighting supply may seriously affect business operation as well as movement of the people inside. Thus, where a department store/shopping mall is supplied by more than one HK Electric supply source, the electrical consultant/designer is strongly recommended spreading the lighting supplies across the different HK Electric supply sources to achieve better security of supply to the lighting.

6.16 Phase Identification

1. Requirements for Meter Leads and Tails with New Cable Colour Code

   a. Single-phase Meter

      Where new colour coded cable is used in meter leads and/or tails, both meter leads and tails shall be fitted with proper, durable and legible phase identification labels (such as cable ties, sleeves, ferrules etc.) marked in L1 or L2 or L3 and N.

      Where new and old colour coded cables are used separately in meter leads and tails, a yellow warning notice in both English and Chinese shall be displayed at or close to the nearest upstream main switch/point of isolation. Details of the label shall comply with the latest edition of Code of Practice for the Electricity (Wiring) Regulations.

   b. Three-phase Meter

      Where new colour coded cable is used in meter leads and tails, it is recommended that both meter leads and tails shall be fitted with proper, durable and legible phase identification labels (such as cable ties, sleeves, ferrules etc.) marked in L1, L2, L3 and N.

      Where different colour coded cables are used in meter leads and tails, both the new and old colour coded cables shall be fitted with proper, durable and legible phase identification labels (such as cable ties, sleeves, ferrules etc.) marked in L1, L2, L3 and N. A yellow warning notice in both English and Chinese shall be displayed at or close to the nearest upstream main switch/point of isolation. Details of the label shall comply with the latest edition of Code of Practice for the Electricity (Wiring) Regulations.

2. New Cable Colour Code Arrangement on Transit Block

Phase identification labels [L1 L2 L3 N E] and [E N L3 L2 L1] shall be provided in appropriate position of the transit block. Details of the labels are shown in Drg. No. GCS/3/16.

3. New Cable Colour Code Arrangement for Single-Core Cables Connected to HK Electric Substation

Phase identification labels L1, L2, L3 and N shall be provided at the cable ends terminated to HK Electric substation. Details of the labels shall be in accordance with Item 9 of the Notes for Drg. No. GCS/3/17.

4. New Cable Colour Code Arrangement for Single-Core Cables Connected to HK Electric Service Cutout

The cable ends terminated onto HK Electric three-phase service cutout shall be fitted with proper, durable and legible phase identification labels (such as cable ties, sleeves, ferrules etc.) marked in L1, L2, L3 and N.

The cable ends terminated onto HK Electric single-phase service cutout shall be fitted with proper, durable and legible phase identification labels (such as cable ties, sleeves, ferrules etc.) marked in L and N.

6.17 Check List for Customer's Schematic Wiring Diagram

1. The installation shall comply with HK Electric Supply Rules and the relevant Government Ordinances and Regulations.

2. Harmonic distortions generated from non-linear loads may affect HK Electric system and/or the electricity supply to other customers. Harmonic distortions shall not exceed the limits as stipulated in our Supply Rules.

3. Undervoltage protective devices should not be installed at main switches or switches affecting supply to more than one customer and/or equipment. Whenever undervoltage protective devices are to be used, they should be installed at the load side only in order to avoid unnecessary tripping to other equipment.

4. The magnetic field generated by customer's high current carrying conductors/cables will cause electromagnetic interference. Architects and E&M consultants are advised to check at the design stage if any area would likely be affected by the magnetic field from the customer's installations and carry out necessary mitigation measures. To reduce the magnitude of magnetic field emanating from the LV single-core cables, it is suggested that LV single-core cables will be installed in the disposition and manner as shown in Drg. No. GCS/6/10.

5. For motor installation design, designers are advised to take into consideration the effect of transient voltage dips, which though infrequent, may occur occasionally because of system disturbance.

6. The length of customer's LV cable between HK Electric service cutout and customer LV main switch shall not exceed 3 metres. The service cutout and main switch shall be in the same compartment.

7. The length of busway/cable between transit block and customer main switch shall normally not exceed 10 metres.

8. The length of customer's LV cable between HK Electric transformer/isolator and customer LV main switch shall not exceed 20 metres.

9. For customer's LV cable between HK Electric transformer/isolator and customer LV main switch, a maximum of four cables per phase may be used. The neutral conductor shall be of same installed rating as the phase conductor.

10. The characteristics of the protective devices for automatic disconnection and the earth fault loop impedance at the LV main switch shall be co-ordinated so that disconnection is achieved within 5 seconds during an earth fault.

11. A main switch/building main switch shall be installed to control all outgoing installations connected to the same source of supply.

12. Switchgear/circuit breakers connected directly to HK Electric transformer/ service cutout shall have short-circuit breaking capacity of 40 kA at low voltage.

13. Circuit breaker used to receive supply directly from HK Electric transformer shall normally be of draw-out type.

14. Where the supply is designed to be taken from more than one transformer, interconnection facilities between main incoming circuit breakers are recommended and shall be arranged in accordance with HK Electric requirements. All incoming and interconnection circuit breakers shall be of 4-pole type interrupting all live conductors which shall be mechanically and electrically interlocked to prevent HK Electric transformers from operating in parallel.

15. In accordance with Regulation 12(2) of the Electricity (Wiring) Regulations, where the supply is taken directly from HK Electric transformer within the premises in which the fixed electrical installation is situated, the main earthing terminal of the installation shall be bonded to the bonding terminal that connects to the earthed point of HK Electric transformer. A disconnection link (Drg. No. GCS/6/09) for testing purpose shall also be provided to disconnect the bonding conductor between HK Electric and customer's earthing system.

16. In accordance with Regulation 12(3) of the Electricity (Wiring) Regulations, where the supply is taken from HK Electric service cutout (LV RMU Type), the main earthing terminal of the fixed electrical installation shall be bonded to the bonding terminal that connects to the exposed conductive parts at the cable termination at the point of supply. A disconnection link (Drg. No. GCS/6/09) for testing purpose shall also be provided to disconnect the bonding conductor between HK Electric and customer's earthing system.

17. The customer’s LV cable between HK Electric service cutout and customer LV main switch shall be of single-core, circular and non-metallic sheathed type.

18. The minimum size of copper conductor to be terminated onto the outgoing service terminals of HK Electric service cutout is 50 mm^2.

19. A maximum of two sets of customer’s wirings could be connected directly to HK Electric service cutout.

20. For installation having a rated capacity exceeding 400 A in each phase of a 3-phase 4-wire system, the associated neutral conductor may have a cross-sectional area smaller than the cross-sectional area of the phase conductors if overcurrent detection is provided for the neutral conductor, which is appropriate to the cross-sectional area of the conductor. This detection shall cause the disconnection of the phase conductors but not necessarily the neutral conductor.

21. A main switch shall be installed to control all the communal installations of the same customer.

22. Communal installations of the same customer should be arranged to receive supply from one source.

23. Where standby generator is installed, mechanically and electrically interlocked 4-pole changeover device shall be used for interconnection between the normal and standby sources to ensure that neutral unbalance and fault current return to the correct source of supply.

24. Changeover device shall be of 4-pole type.

25. Local isolation switch shall be installed after the changeover device.

26. Local riser switch shall be installed for each multi-customer rising mains at each tower/block.

27. 3-phase 4-wire electrical rising mains with 3-phase 4-wire tee-off at each floor shall be installed.

28. For three-phase electrical rising mains, tee-off or lateral mains at each floor shall be 3-phase 4-wire.

29. A main switch/cutout shall be installed for the lateral mains at each floor to control the downstream tenant's main switches.

30. Proper labels displaying the Supply Number (SN) should be provided at the lateral mains main switch/cutout/plug-in unit at each floor and the disconnection link.

31. Loading on the three phases should be properly balanced in lateral mains and rising mains.

32. Proper lateral mains and meter board wiring shall be provided at meter rooms/ducts for future shop tenants in order to avoid future chaotic situation. Adequate space shall be provided in meter room/duct for main switches of future shop tenants.

33. Riser earthing conductor shall be installed.

34. The minimum cross-sectional area of riser earthing conductor shall be 70 mm^2 for copper and 150 mm^2 for aluminum.

35. Switchgear/circuit breakers shall have adequate short-circuit breaking capacity at the point of installation.

36. Rating of customer main incomer switch shall not exceed 2250 A.

37. Electrical installation inside a unit/flat in a multi-story building shall be considered as a single fixed electrical installation. Each shall have its own main bonding connection, and the warning notice "SAFETY EARTH CONNECTION - DO NOT REMOVE" and "安全接地終端 － 切勿移去" in legible letters and characters each not less than 5 mm high shall be permanently fixed at or near the point of connection of every earthing conductor to an earth electrode, and at or near each main bonding connection.

38. Customer main switch shall be installed at a position immediately before HK Electric meter.

39. Single-phase customer main switch installed immediately before HK Electric meter shall be of double-pole type interrupting both live and neutral conductors.

40. Customer main switch shall incorporate means of isolation/switching and protection against overcurrent and earth leakage.

41. Instantaneous type RCD shall not be used as multi-customer riser switch.

42. For 3-phase 4-wire supply, both 4-pole and TP&N switch may be used. If the switch is a 3-pole linked switch or circuit breaker, a link shall be inserted in the neutral conductor and securely fixed by bolts or screws.

43. An installation requiring more than 60 A should be arranged to receive three-phase supply.

44. Appropriate rating factors shall be applied to determine the current carrying capacity of cables.

45. The current rating of a cable in a circuit shall match with the current rating of the corresponding protective device at the origin of the circuit.

46. When an installation is supplied by more than one HK Electric source, such as transformer/service cutout, one application form for each source should be provided.

47. A segregated, sealable and readily accessible C.T. chamber shall be provided in all switch/switchboard to accommodate HK Electric metering equipment for supply greater than 100 A, three-phase.

48. For new installations of C.T. operated meters with a main switch rating of 600 A or above, located inside the customer's switchboard, a Cat. 5e cable shall be supplied and installed by the customer with mechanical protection from the meter to the Tariff Meter Communication (TMC) Termination Box in the customer's switchroom. Each end of the mechanical protection shall be terminated with a junction box inside which there should be at least 1-metre spare length of the Cat. 5e cable. The junction boxes shall be within 0.5 metres of the meter and the TMC Termination Box.

49. Metering point of an installation shall be at a position as close to the source of supply as practicable.

50. Metering point of an installation shall be arranged to avoid double metering or unmetered situation. For load transfer cases, REW shall check and confirm that there is no other meter installed before and after the present or proposed metering point.

51. Proper labels should be applied on spare switchgear on the customer switchboard, to identify if the corresponding circuit is metered or unmetered.

52. Check meters should not be installed for resale of electricity obtained from HK Electric.

53. For three-phase installation with main switch rating greater than 100 A, C.T. operated meter will be installed.

54. For three-phase installation with main switch rating of 100 A and below, whole current (direct connected) type meter will be installed.

55. For three-phase installation with main switch rating of 100 A and below, 35 mm^2, circular, multi-stranded, copper meter leads and meter tails shall be provided for termination onto HK Electric whole current (direct connected) type meter.

56. For single-phase installation, not greater than 25 mm^2, circular, multi-stranded, copper meter leads and meter tails shall be provided for termination onto HK Electric whole current (direct connected) type meter.

57. For termination onto HK Electric whole current (direct connected) type meter, circular, multi-stranded copper conductors shall be used. Sector-shaped conductors are not allowed.

58. The size of meter leads and meter tails shall not be less than 4 mm^2 stranded copper conductors.

59. Meter position shall satisfy the requirement for meter reading, meter fixing and meter maintenance. It shall comply with the space requirements per Drg. No. GCS/5/14 and the general requirement for installation of tariff meter.

60. Permanent, tidy and securely fixed address label shall be provided for meter board, main switch, meter tails and C.T. chamber located inside the switchboard.

61. All metering cables shall be correctly and permanently color coded for phase identification.

62. Adequate lighting shall be provided at meter duct/room/cubicle/enclosure for meter reading/maintenance work.

63. Meter duct/room shall be properly labelled, easily accessible and be provided with locks. A master key exclusively for the use of all the meter duct/room locks shall be available at the Management Office to facilitate monthly meter reading. This master key shall not be able to open other locks.

64. The length of customer's 11-kV/22-kV cables between HK Electric 11-kV/22-kV line switch cum metering unit and customer 11-kV/22-kV main switch shall not exceed 20 metres.

65. To prevent sudden transfer of large block load among the 11-kV/22-kV supply points, which could overload HK Electric network and result in further loss of supply, locking facilities on the customer's switches which are interconnecting different 11-kV/22-kV supply points shall be required. For the details of the locking arrangement, please refer to Clause 6.2.3.c.

66. 11-kV/22-kV main switch shall comply with the following requirements:

    a. The 11-kV main switch, i.e. the circuit breaker, used to receive supply directly from HK Electric supply source, should be rated for use at 11 kV and with rated short time withstand current of 18.4 kA rms for 3 seconds. The lightning impulse withstand voltage should not be less than 75 kV peak.

b. The 22-kV main switch, i.e. the circuit breaker, used to receive supply direct from HK Electric supply source, should be rated for use at 22 kV and with rated short time withstand current of 25 kA rms for 3 seconds. The lightning impulse withstand voltage should not be less than 125 kV peak.

c. The overcurrent setting of the main circuit breaker shall normally not exceed 200 A and should normally be of draw-out type and lockable at that position, rated for fault making and breaking, and shall have an earthing switch to earth the incoming cable. Fixed type circuit breaker in conjunction with an isolator which is mechanically interlocked with the circuit breaker may be used provided that there is clear indication between the service position and the isolated position and can be lockable at the isolated position.

d. Interlock facilities shall be provided between the circuit breaker, the earthing switch and the isolator.

e. Safety shutter shall be provided at the switchgear spouts.

f. The earthing switch at the main incomer shall be lockable at open and closed position and of fault making type. The earthing switch shall only be operated by mechanical means when it is closed to circuit earth position.

g. HK Electric will lock the earthing mechanism of the customer's 11-kV/22-kV incomers earth switch in order to avoid inadvertent closing of HK Electric 11-kV/22-kV supply to earth. For the details of the locking arrangement, please refer to Clause 6.3.7.

67. For 11-kV/22-kV supply, V.T.s and C.T.s are normally accommodated in HK Electric 11-kV/22-kV line switch cum metering unit inside HK Electric substation while tariff meters will be installed at the customer's switchroom.

68. Where the supply is designed to be taken from more than one 11-kV/22-kV supply point, the customer is recommended installing interconnection(s) among the 11-kV/22-kV supply points for better security of electricity supply. All incoming and interconnection switchgears/circuit breakers shall be of 3-pole type interrupting all live conductors and mechanically and electrically interlocked to prevent HK Electric 11-kV/22-kV sources from operating in parallel.

69. Miniature Circuit Breakers (MCB) and Moulded Case Circuit Breakers (MCCB) should be equipped with lockable function such that these devices can be locked off and only be able to be unlocked by the use of keys or tools used to lock off these devices.

70. The erection of Electric Vehicle (EV) charging facilities shall comply with the following requirements:

    a. EV charging facilities are fixed electrical installations and shall comply with the relevant requirements of the Electricity Ordinance (Cap. 406) and its subsidiary regulations.

    b. Electrical work on EV charging facilities including design, installation, commissioning, inspection, testing, maintenance, modification and repair shall be carried out by registered electrical contractors and registered electrical workers of the appropriate grade.

    c. All EV charging facilities which are connected to, or intended to be connected to HK Electric supply of electricity must comply with HK Electric Supply Rules, the latest edition of Code of Practice for the Electricity (Wiring) Regulations and other relevant Government Ordinances and Regulations.

    d. The electrical installations shall comply with the << Technical Guidelines on Charging Facilities for Electric Vehicles >> and << Technical Guidelines for Electric Vehicle (EV) Charging-enabling for Car Parks of New Building Developments >> published by the Electrical and Mechanical Services Department and Environment Bureau/Electrical and Mechanical Services Department respectively.

    e. EV charging facilities shall be supplied and metered appropriately as per HK Electric requirements.

    f. The Tariff Meter Communication (TMC) Infrastructure provisions shall be made by customers during the design and construction stage. The proposed arrangements of facilities for TMC infrastructure provisions should be submitted to HK Electric for consideration during the design stage. For details, please refer to Drg. No. GCS/5/24.

    g. Electrical loads of EV charging facilities should be evenly distributed among the three phases as reasonably practicable.

h. Fault Protection

i. Except for circuits using the protective measure of electrical separation, each charging point shall be protected by its own RCD of at least Type A, having the characteristic specified in Code 11J of the latest edition of Code of Practice for the Electricity (Wiring) Regulations.

ii. Each charging point incorporating a socket outlet or connector complying with the IEC 62196 series, protective measures against DC fault current shall be taken , except where provided by the EV charging equipment. The appropriate measures, for each connection point, shall be as follows:

- RCD Type B; or

- RCD Type A and appropriate equipment that provides disconnection of the supply in case of DC fault current above 6 mA.

i. Electric cable of each final circuit shall be selected based on the design current of the EV charging facilities and taking into account the constraint of voltage drop in the circuit in accordance with the relevant requirements of the latest Code of Practice for the Electricity (Wiring) Regulations. A larger size electric cable may be used to facilitate future upgrade. In connection with this, a conductor size suitable for carrying a minimum rated current of 32 A is recommended.

j. Means of preventing unauthorized usage of EV charging facilities such as housing the socket outlet in a padlocked box or using an access card for energizing charging facilities may be provided as necessary.

71. The metering arrangement for EV charging facilities shall comply with the following requirements:

a. Tariff meters shall be installed in a clean and dry indoor location which is not exposed to weather, mechanical damage, vibrations, extremes of temperature or dampness etc. They shall be under conditions which are suitable for meter installation, reading and maintenance. The meter position shall be readily accessible from communal area at all times in accordance with Chapter 5 – Metering Requirements.

b. Supply to EV charging facilities shall normally be derived from the electric supply equipment installed on the same floor level. HK Electric meters for individual parking spaces shall be installed inside a communal meter room at each car park level.

c. If a meter room is not available, a group of meters may be installed inside a meter cubicle/enclosure subject to the following conditions:

   i. A meter cubicle/enclosure shall be installed at a suitable location within the car park area with prior agreement from HK Electric. Typical arrangement of meter cubicle/enclosure can be referred to Drg. No. GCS/7/02.

   ii. The following diagrams shall be posted at the front over of the meter cubicle/enclosure of the corresponding supply zone:

      - Layout drawing showing the location and carpark number for each parking space with EV charging facilities
      - LV schematic diagram

      Example of the above diagrams can be referred to Drg No. GCS/7/03.

   iii. Safety poles with yellow/black marking or tape shall be erected at least 1,000 mm in front of the meter cubicle/enclosure in order to provide clear delineation of working boundary. Safety poles shall be located in coordination with the meter cubicle/ enclosure, so it would allow easy access for working personnel. Typical arrangement of safety pole can be referred to Drg. No. GCS/7/04.

d. HK Electric meter shall be electrically connected at a position immediately after the customer main switch and the metering point of an installation shall be at a position as close to the origin of the supply source as practicable.

e. Meter position shall satisfy the requirements for meter reading, meter fixing and meter maintenance. For details, please refer to Drg. No. GCS/5/14, GCS/5/17 and GCS/5/18.

f. A meter may be applied for each parking space with EV charging facilities (Refer to Drg. No. GCS/7/05).

g. A single meter may also be applied for several parking spaces with EV charging facilities (Refer to Drg. No. GCS/7/06).

h. HK Electric may allow customers to install their check meters / timers for recovering electricity consumption charges for EV charging via metered communal installations (Refer to Drg. No. GCS/7/07). This is restricted for EV charging installations only and customers are required to obtain prior approval of HK Electric by submitting a standard form (Form EV1). The recovery of electricity consumption charges for non-EV charging installations is not allowed.

72. The proposed arrangements of facilities (as shown in Drg. Nos. GCS/5/23 and GCS/5/24) for the TMC infrastructure provisions should be submitted to HK Electric for consideration during the design stage. The following facilities shall be supplied and installed at locations specified in Drg. No. GCS/5/25 and customers are responsible for subsequent repair and maintenance of the facilities.

a. A single-phase double-pole protective device of rating not less than 6 A and 5-A single-phase fused connection unit shall be installed to provide a supply for TMC equipment. This 6-A single-phase double-pole protective device shall be connected from an unmetered lateral/rising mains and a metallic enclosure for the protective device shall be properly earthed. The wires amongst the protective device, the fused connection unit and the unmetered lateral/rising mains shall be of at least 4-mm^2 Cu PVC/PVC cable. A typical arrangement for the above is shown in Drg. No. GCS/5/26.

b. One hard wood with varnish treatment board of minimum size 600 mm x 400 mm (H x W), with a front clearance of minimum 900 mm and at least 12 mm thick for mounting of the TMC equipment enclosure and the fuse connection unit shall be provided.

c. Relevant plastic engraved labels shall be installed on the wooden board, fused connection unit and protective device as shown in Drg. Nos. GCS/5/23 and GCS/5/24.

73. For buildings with HK Electric distribution substations, the following additional facilities for the TMC infrastructure provisions shall be provided between the customer's main switchroom(s) and meter room(s) on the lowest floor for tenants:

a. One set of 20-mm diameter earthed galvanised iron (G.I.) conduit, with associated G.I. junction boxes shall be installed from the TMC termination box at the customer's main switchroom up through to each meter room(s) of the lowest floor above customer's main switchroom. The G.I. conduit shall be supported and fixed to the side wall at an interval of not more than 1200 mm. The method of anchoring conduit must be by red-head or similar device.

The G.I. junction boxes shall be earthed and be installed on the wooden board for TMC equipment enclosure and also adjacent to the TMC termination box in the customer's main switchroom. The size of the junction boxes should be 86 mm x 86 mm x at least 45 mm (H x W x D). The covers of the junction boxes should be labelled by plastic engraved labels with the words 'DO NOT DISTURB (FOR HK ELECTRIC ONLY) 請勿干擾 (港燈專用)' as shown in Drg. No. GCS/5/23.

b. Cat. 6 STP (Shielded Twisted Pair) communication cables shall be supplied and installed from the TMC termination box at the customer's main switchroom up through to the junction box on the wooden board via the GI conduit. The customers are required to provide testing and commissioning reports for the installed Cat. 6 STP communication cables to HK Electric. HK Electric reserves the right to conduct separate tests/witness tests to ensure an acceptable performance of the installed communication cables.

An additional length of 1 metre for the Cat. 6 STP communication cables should be coiled inside the TMC termination box and the junction box on the wooden board. The cable end at the wooden board shall be terminated according to the RJ45 T568B standard.

6.18 Technical and Interface Requirements for Grid Connection of Renewable Energy Power System

For details, please refer to the "Technical Requirements for Renewable Energy Power System" and "Interface Requirements for Grid Connection of Renewable Energy Power System" on our website at:

https://www.hkelectric.com/en/customer-services/smart-power-services/feed-in-tariff-scheme/applicationformsandschemedocuments

6.19 Schedule of Drawings - Guidelines on Design of Electrical Installation

Drawing No.	Drawing Title
GCS/6/01	Label for Locking Point of 11-kV/22-kV Interconnection Switch
GCS/6/02	Key Box for 11-kV/22-kV Interconnection Switch
GCS/6/03	Examples of Cable Sizes for the Cables Connecting between HK Electric Transformer and Customer LV Main Switch
GCS/6/04	Typical Arrangement for Customer's LV Interconnection for a 2-Transformer Substation (P245A/93/R-2)
GCS/6/05	Typical Arrangement for Customer's LV Interconnection for a 3-Transformer Substation (P246A/93/R-2)
GCS/6/06	Typical Arrangement for Customer's LV Interconnection for a 4-Transformer Substation (P247A/93/R-2)
GCS/6/07	HK Electric Standard Locks (CMD_A04110A)
GCS/6/08	Label for Locking Earthing Switch of Customer 11-kV/22-kV Main Switch
GCS/6/09	Recommended Installation Detail for the Disconnection Link with Insulated Enclosure for Bonding Conductor between HK Electric Earthing System and Customer's Main Earthing System
GCS/6/10	Suggestions for Design & Installation of LV Single-core Cables to Minimize Electromagnetic Interference (P302/95/R-2)
GCS/6/11	Breaking Capacity of Customer Main Switch
GCS/6/12	Main Switch/Local Riser Switch Arrangement for Buildings
GCS/6/13	Multi-customer Rising Mains System

GCS/6/14	Incorrect Multi-customer Riser Switch
GCS/6/15	Earth Fault Protection for Multi-customer Riser Switch
GCS/6/16	Arrangement of Interconnection Circuit Breaker(s) Between Two or More Supply Sources
GCS/6/17	Changeover Arrangement for Standby Supply
GCS/6/18	Basic Requirements for Temporary Supply Used for Decoration Purpose (Total 2 Sheets)
GCS/6/19	Recommended Design Examples for Connection of Residential Load and Commercial Load within the Same Development (P639/06) (Total 2 Sheets)

NOTE : ALL DIMENSIONS ARE IN mm.

Drg. No. GCS/6/01

LABEL FOR LOCKING POINT OF 11-kV/22-kV INTERCONNECTION SWITCH

CONSTRUCTION DETAILS OF KEY BOX :

1. MATERIAL : 3-mm TH. MILD STEEL PLATE.
2. FINISHING : TWO COATS RUST-OLEUM 960, RUST INHIBITIVE PRIMER AND TWO COATS BEIGE ENAMAL PAINT SPRAYED ON INNER AND OUTER SURFACES.
3. ALL WELDING CONSTRUCTION.
4. DIMENSIONS ARE IN mm UNLESS OTHERWISE SPECIFIED.

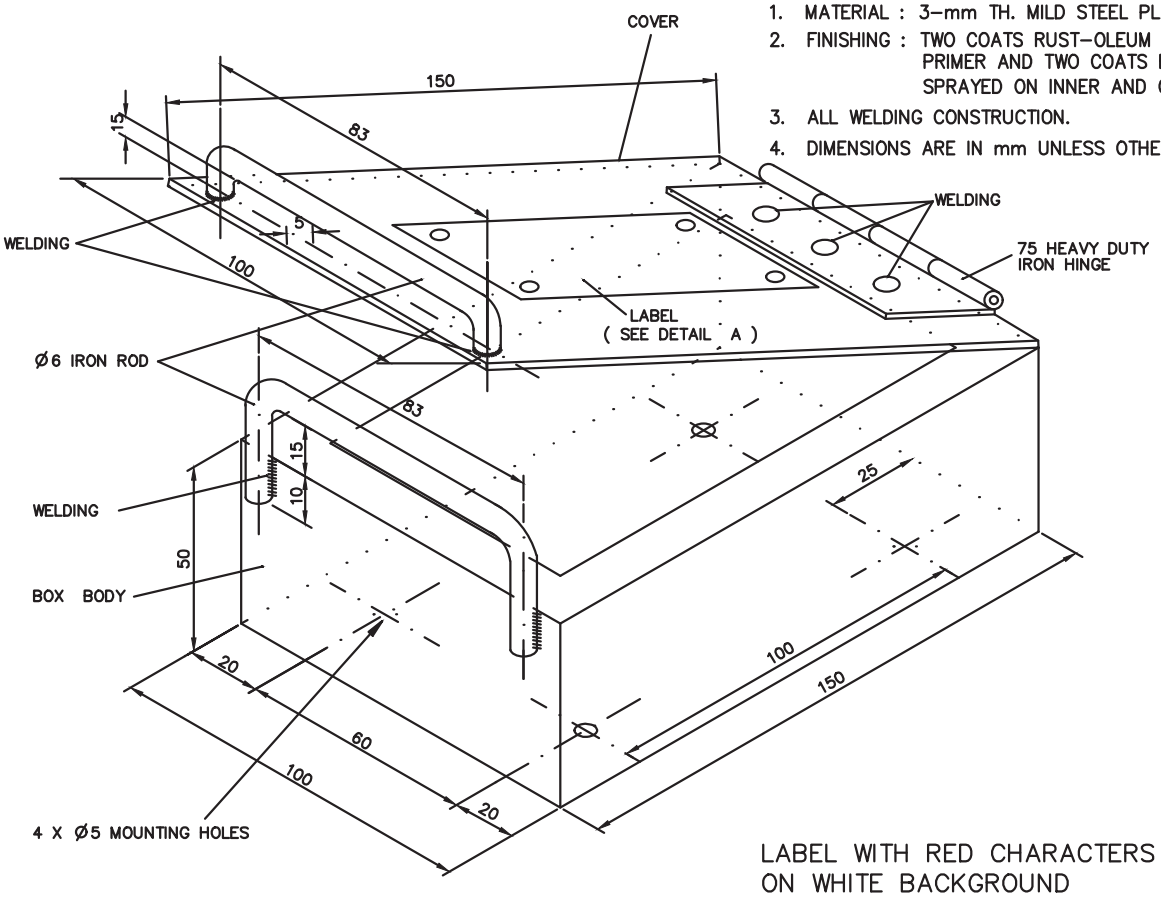

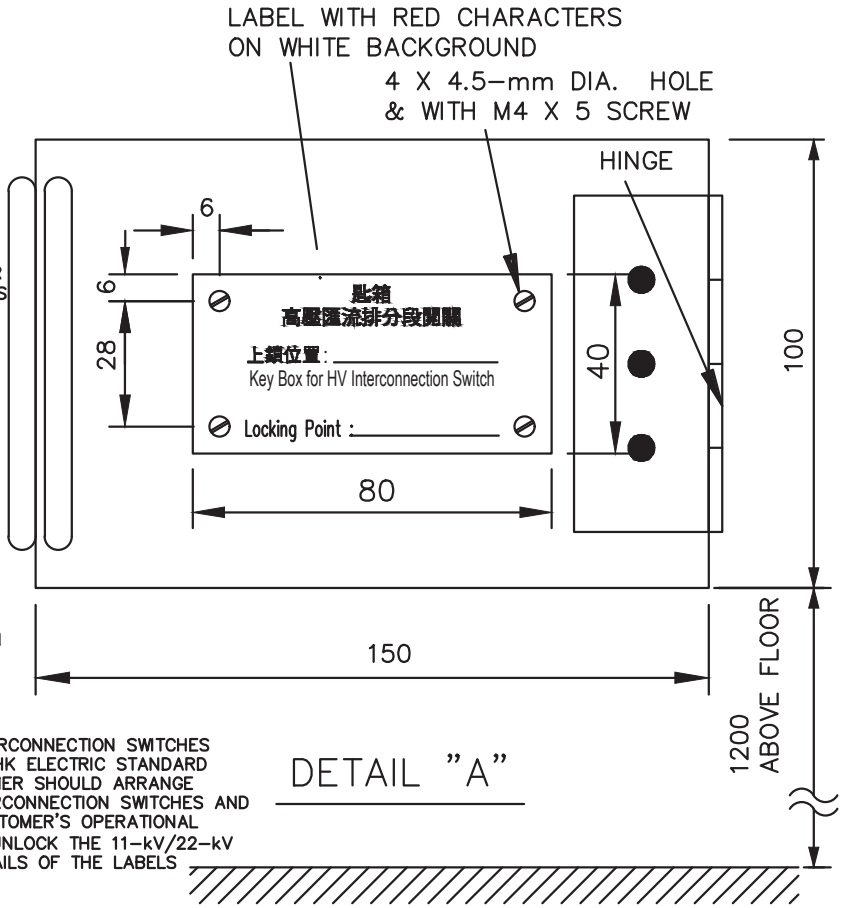

DETAIL "A"

NOTES :

TO PREVENT SUDDEN TRANSFER OF LARGE BLOCK LOAD AMONG THE 11-kV/22-kV SUPPLY POINTS, WHICH COULD OVERLOAD HK ELECTRIC NETWORK AND RESULT IN FURTHER LOSS OF SUPPLY, LOCKING FACILITIES ON THE CUSTOMER'S SWITCHES WHICH ARE INTERCONNECTING DIFFERENT 11-kV/22-kV SUPPLY POINTS ARE REQUIRED. THESE LOCKING FACILITIES SHOULD ONLY BE OPERATED BY HK ELECTRIC AUTHORISED PERSONS INCLUDING IN THE EVENT OF CONTINGENCY.

IN GENERAL, CUSTOMER SHOULD ARRANGE PADLOCKS AT THE ELECTRICAL CONTROL SWITCH AND THE MANUAL OPERATING SWITCH OF THE CUSTOMER'S 11-kV/22-kV INTERCONNECTION SWITCHES.

THE CUSTOMER SHOULD PROVIDE AND INSTALL KEY BOXES, ONE FOR EACH INTERCONNECTION SWITCH. THE KEY BOXES SHOULD BE INSTALLED AT A CONSPICUOUS LOCATION INSIDE THE CUSTOMER'S SWITCHROOM AS CLOSE TO THE RESPECTIVE INTERCONNECTION SWITCHES AS POSSIBLE BUT IN GENERAL SHOULD NOT BE FARTHER THAN 3 m FROM THE RESPECTIVE INTERCONNECTION SWITCHES. THE LAYOUT PLAN OF THE KEY BOXES SHOULD BE SUBMITTED FOR HK ELECTRIC PRIOR APPROVAL.

THE KEYS OF PADLOCKS WHICH ARE APPLIED ON THE INTERCONNECTION SWITCHES SHOULD BE KEPT INSIDE THE KEY BOXES RESPECTIVELY. HK ELECTRIC STANDARD LOCKS WILL BE APPLIED TO THE KEY BOXES. THE CUSTOMER SHOULD ARRANGE BILINGUAL LABELS AT THE CONCERNED 11-kV/22-kV INTERCONNECTION SWITCHES AND ON THE WALL ABOVE THE KEY BOXES TO REMIND THE CUSTOMER'S OPERATIONAL STAFF THE REQUIREMENT TO APPROACH HK ELECTRIC TO UNLOCK THE 11-kV/22-kV INTERCONNECTION SWITCHES BEFORE LOAD TRANSFER. DETAILS OF THE LABELS ARE SHOWN IN DRG. NO. GCS/6/01.

Drg. No. GCS/6/02

KEY BOX FOR 11-kV/22-kV INTERCONNECTION SWITCH

Customer Main Switch Rating	Cables Types (1)	Installation Method (2)			
		Horizontal Flat Spaced		Trefoil	
		Minimum Cables Size (mm^2)	No. of cables per Phase	Minimum Cables Size (mm^2)	Cables per Phase
800 Amp.	XLPE	630	1	400	2
	PVC	400	2	630	2
1200 Amp.	XLPE	500	2	400	3
	PVC	400	3	500	4
				630	3
1600 Amp.	XLPE	400	3	500	4
	PVC	500	4	-	-
		630	3		
2250 Amp.	XLPE	630	4	-	-

Notes :

1. The cables are single-core XLPE or PVC insulated copper cables, non-armoured with sheath.
2. Installation methods are based on Method 118 to 120 as stipulated in Appendix 7 of Code of Practice for the Electricity (Wiring) Regulations.
3. The trench is exclusively used by the main cables.
4. The trench shall have sufficient space for the cables.
5. The maximum ambient temperature is 40℃.
6. The maximum length of the main cables is 20 m.
7. If the installation method and/or site condition differs from the above, the figures in the table may not be applicable.
8. The figures in the above table are for general reference only. This shall not circumvent or precede any requirements in the HK Electric Supply Rules, the latest edition of Code of Practice for the Electricity (Wiring) Regulations and other relevant Government Ordinances and Regulations.
9. The installation shall comply with HK Electric Supply Rules, the latest edition of Code of Practice for the Electricity (Wiring) Regulations and other relevant Government Ordinances and Regulations.

Drg. No. GCS/6/03

EXAMPLES OF CABLE SIZES FOR THE CABLES CONNECTING BETWEEN HK ELECTRIC TRANSFORMER AND CUSTOMER LV MAIN SWITCH

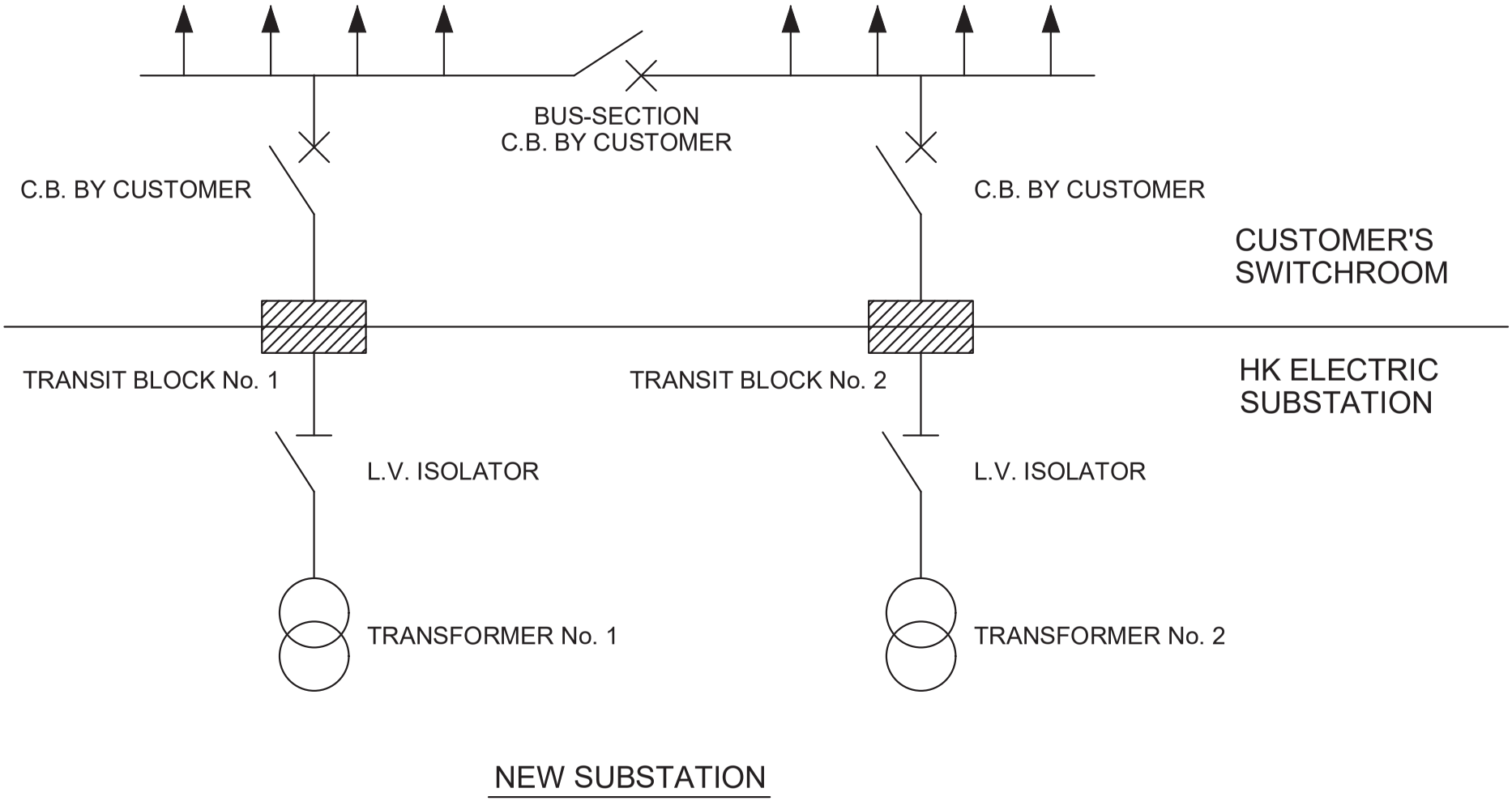

Drg. No. GCS/6/04

TYPICAL ARRANGEMENT FOR CUSTOMER'S LV INTERCONNECTION FOR A 2-TRANSFORMER SUBSTATION (P245A/93/R-2)

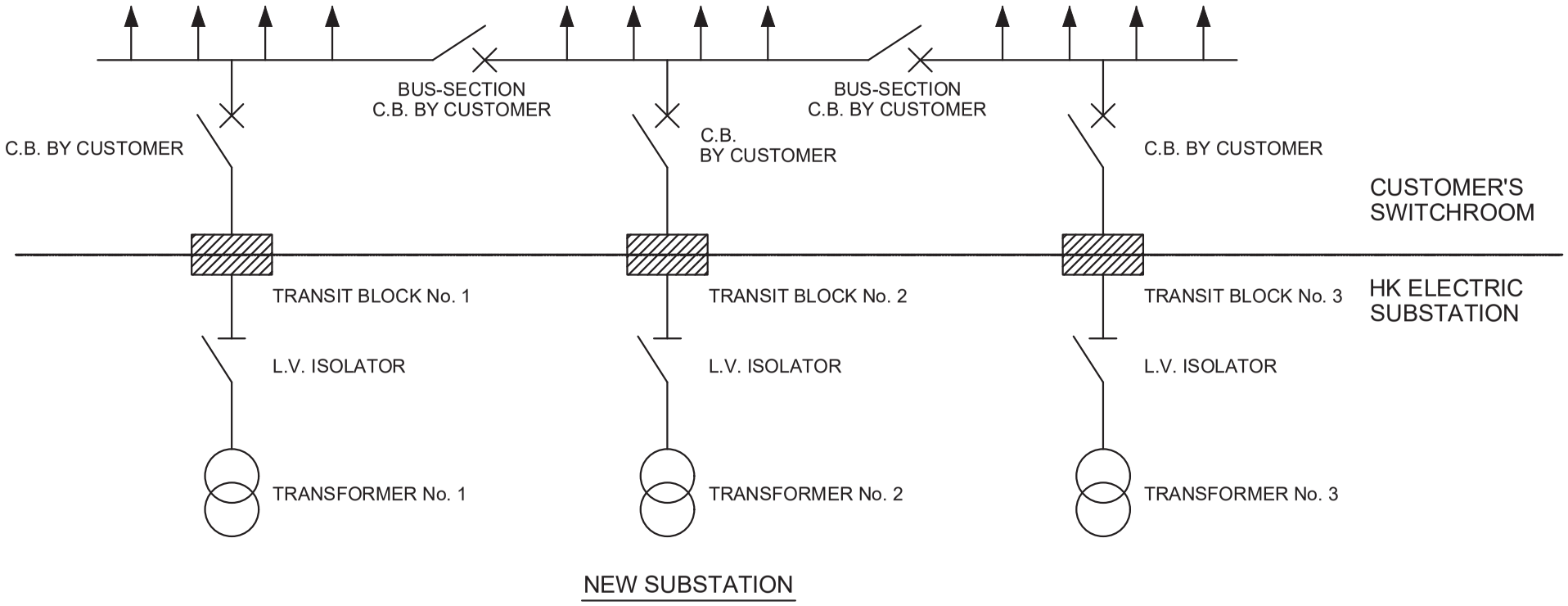

Drg. No. GCS/6/05

TYPICAL ARRANGEMENT FOR CUSTOMER'S LV INTERCONNECTION FOR A 3-TRANSFORMER SUBSTATION (P246A/93/R-2)

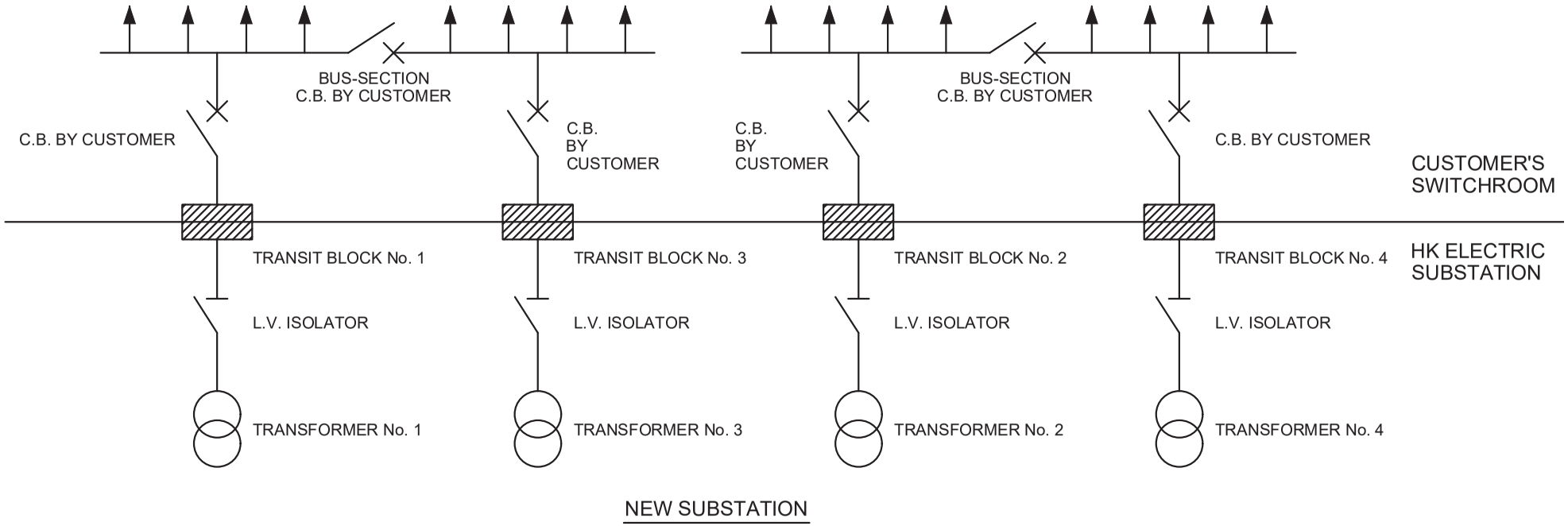

Drg. No. GCS/6/06

TYPICAL ARRANGEMENT FOR CUSTOMER'S LV INTERCONNECTION FOR A 4-TRANSFORMER SUBSTATION (P247A/93/R-2)

STANDARD LOCK MODEL NO. : PL320/20

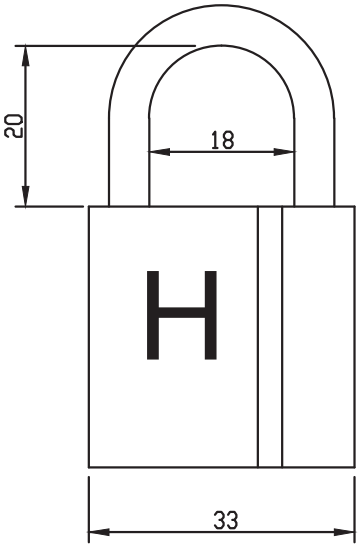

ELEVATION

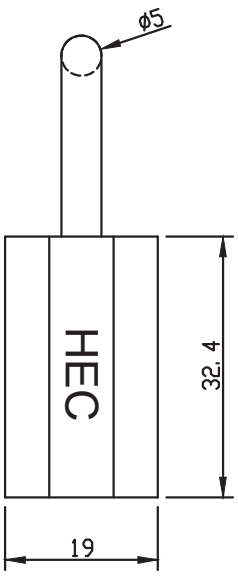

END VIEW

STANDARD LOCK MODEL NO. : PL320/50

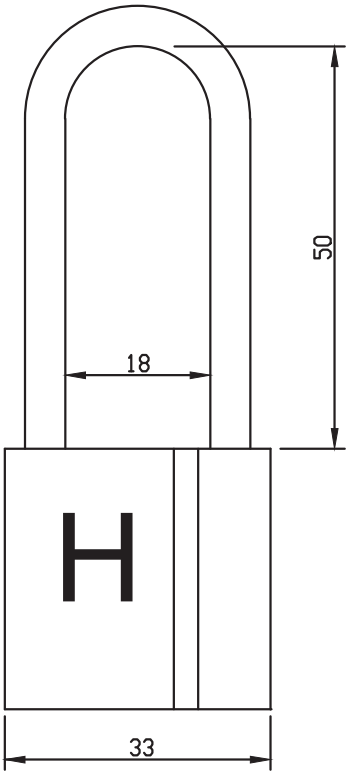

ELEVATION

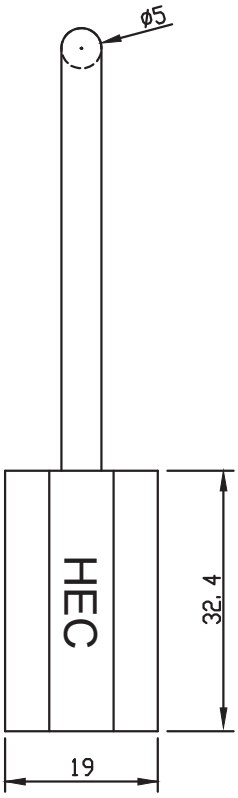

END VIEW

NOTE : ALL DIMENSIONS ARE IN mm.

Drg. No. GCS/6/07

HK ELECTRIC STANDARD LOCKS (CMD_A04110A)

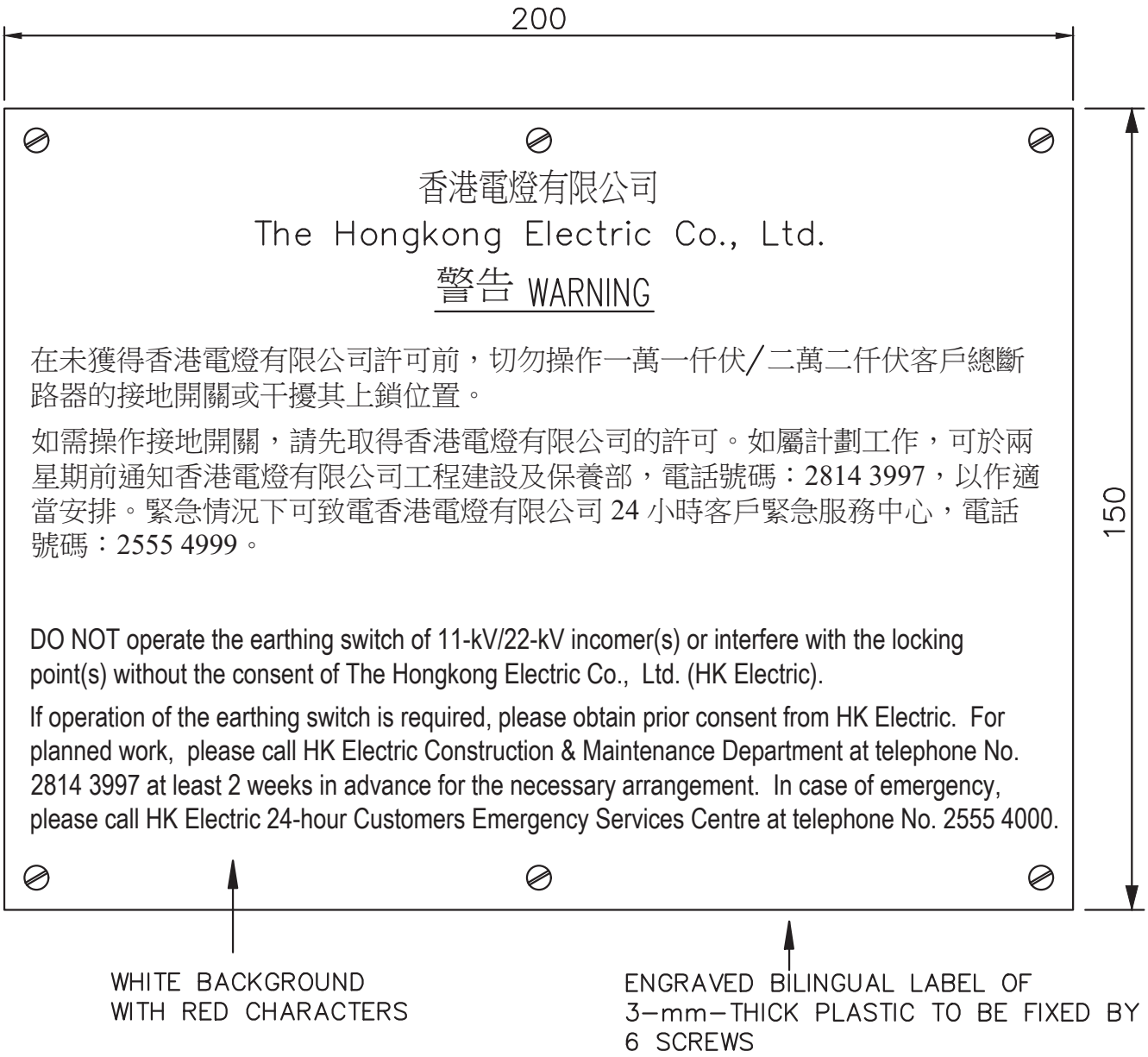

NOTES :

1. HK ELECTRIC WILL LOCK THE EARTHING MECHANISM OF THE CUSTOMER'S 11-kV/22-kV INCOMERS EARTH SWITCH TO MAINTAIN IT IN OPEN POSITION IN ORDER TO AVOID INADVERTENT CLOSING OF HK ELECTRIC 11-kV/22-kV SUPPLY TO EARTH WITHOUT THE PERMISSION FROM HK ELECTRIC. THE CUSTOMER'S 11-kV/22-kV INCOMERS SHOULD PROVIDE NECESSARY PROVISIONS TO ACCEPT THE APPLICATION OF EITHER ONE OF THE HK ELECTRIC PROVIDED STANDARD LOCKS AS SHOWN IN DRG. NO. GCS/6/07 TO LOCK THE EARTHING MECHANISM IN OPEN POSITION. THE CUSTOMER SHOULD ALSO ARRANGE BILINGUAL LABEL(S) AS SHOWN IN THIS DRAWING AT THE CONCERNED CUSTOMER MAIN SWITCH(ES) .

2. ALL DIMENSIONS ARE IN mm.

Drg. No. GCS/6/08

LABEL FOR LOCKING EARTHING SWITCH OF CUSTOMER 11-kV/22-kV MAIN SWITCH

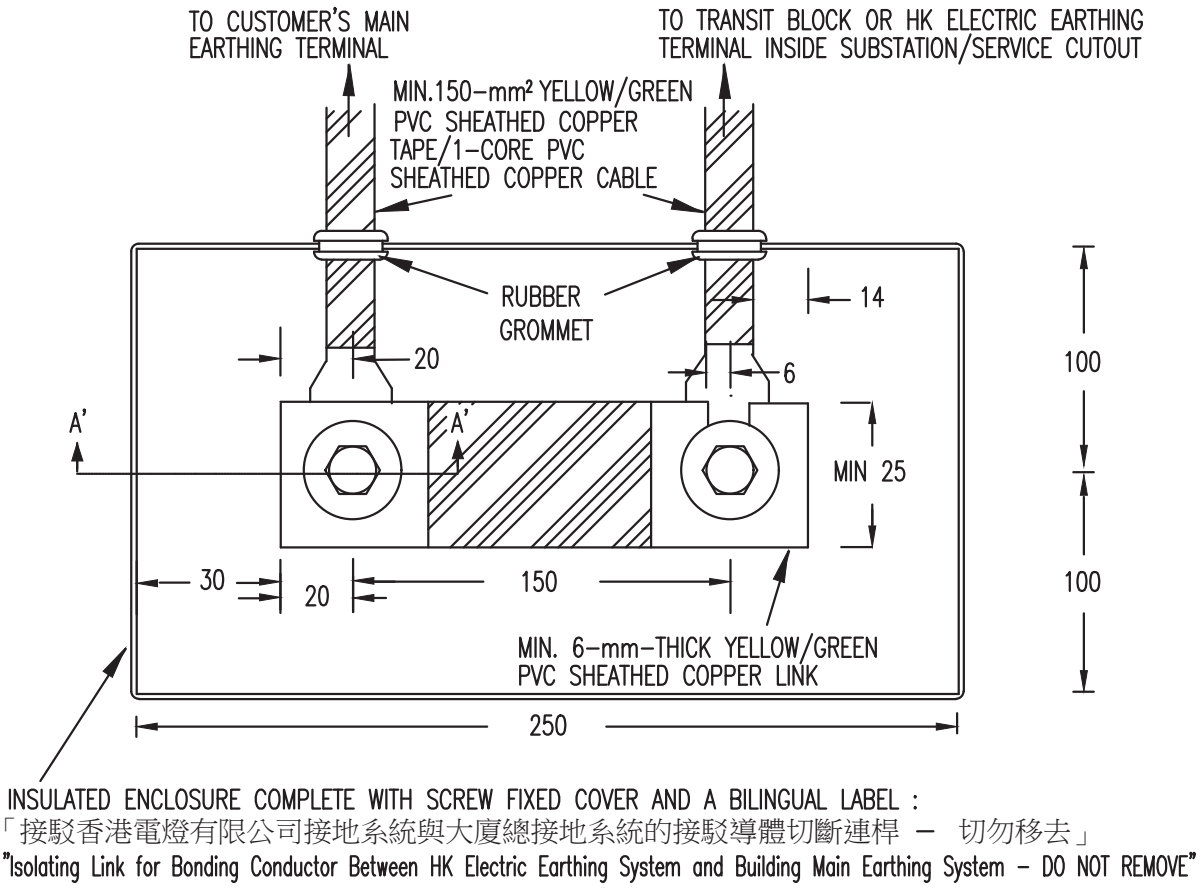

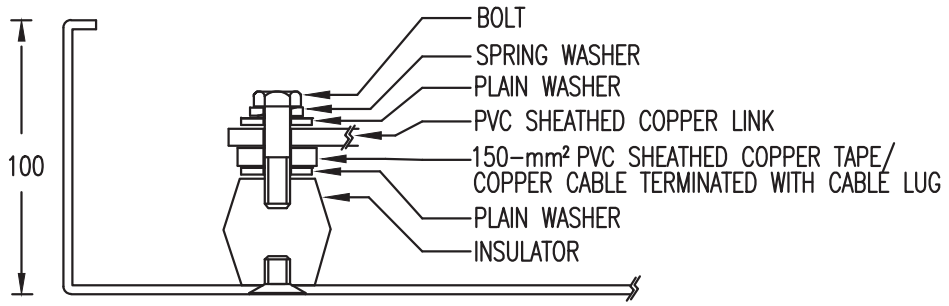

Sectional Elevation A-A'

NOTES :

1. All dimensions are in mm.
2. Where the supply is taken directly from HK Electric transformer(s) within the premises in which the installation is situated. The position of the disconnection link should be installed near the customer's main earth terminal.
3. Where the supply is taken from HK Electric service cutout having exposed conductive parts, the position of the disconnection link should be installed near the bonding terminal provided by HK Electric.

Drg. No. GCS/6/09

RECOMMENDED INSTALLATION DETAIL FOR THE DISCONNECTION LINK WITH INSULATED ENCLOSURE FOR BONDING CONDUCTOR BETWEEN HK ELECTRIC EARTHING SYSTEM AND CUSTOMER'S MAIN EARTHING SYSTEM

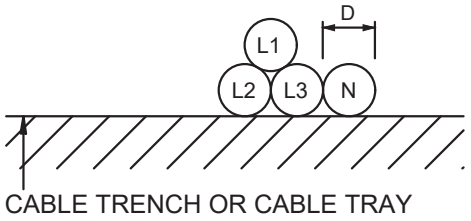

LEGEND:
L1 = PHASE 1 OF 3-PHASE CIRCUIT
L2 = PHASE 2 OF 3-PHASE CIRCUIT
L3 = PHASE 3 OF 3-PHASE CIRCUIT
N = NEUTRAL
D = DIAMETER OF SINGLE-CORE CABLES

ONE CABLE PER PHASE

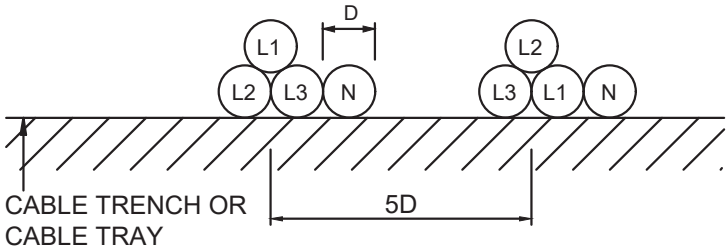

TWO CABLES IN PARALLEL PER PHASE

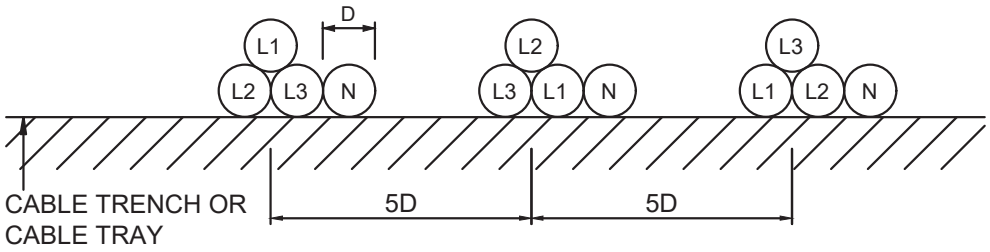

THREE CABLES IN PARALLEL PER PHASE

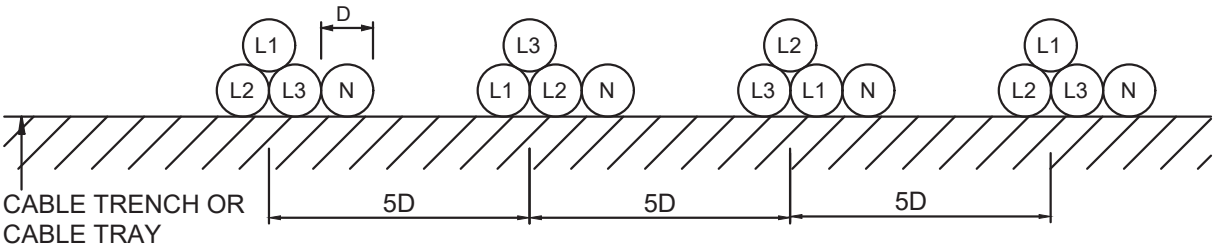

FOUR CABLES IN PARALLEL PER PHASE

NOTES : TO MINIMIZE THE ELECTROMAGNETIC INTERFERENCE GENERATED FROM SINGLE-CORE CABLES, IT IS SUGGESTED TO IMPLEMENT THE FOLLOWING MEASURES IN THE DESIGN AND INSTALLATION OF THE CABLES :

1) ALL THE SINGLE-CORE CABLES SHOULD BE OF SAME CONDUCTOR, SAME CROSS SECTIONAL AREA, SAME TYPE, SAME CONSTRUCTION AND FROM THE SAME MANUFACTURER.
2) ALL THE SINGLE-CORE CABLES SHOULD BE OF EQUAL LENGTH AND FOLLOW THE SAME ROUTE OF INSTALLATION.
3) THE SINGLE-CORE CABLES MUST NOT BE ABLE TO OPERATE INDIVIDUALLY.
4) THE LAYOUT OF SINGLE-CORE CABLES SHOULD BE ARRANGED AS SHOWN IN THIS DRAWING.

Drg. No. GCS/6/10

SUGGESTIONS FOR DESIGN & INSTALLATION OF LV SINGLE-CORE CABLES TO MINIMIZE ELECTROMAGNETIC INTERFERENCE (P302/95/R-2)

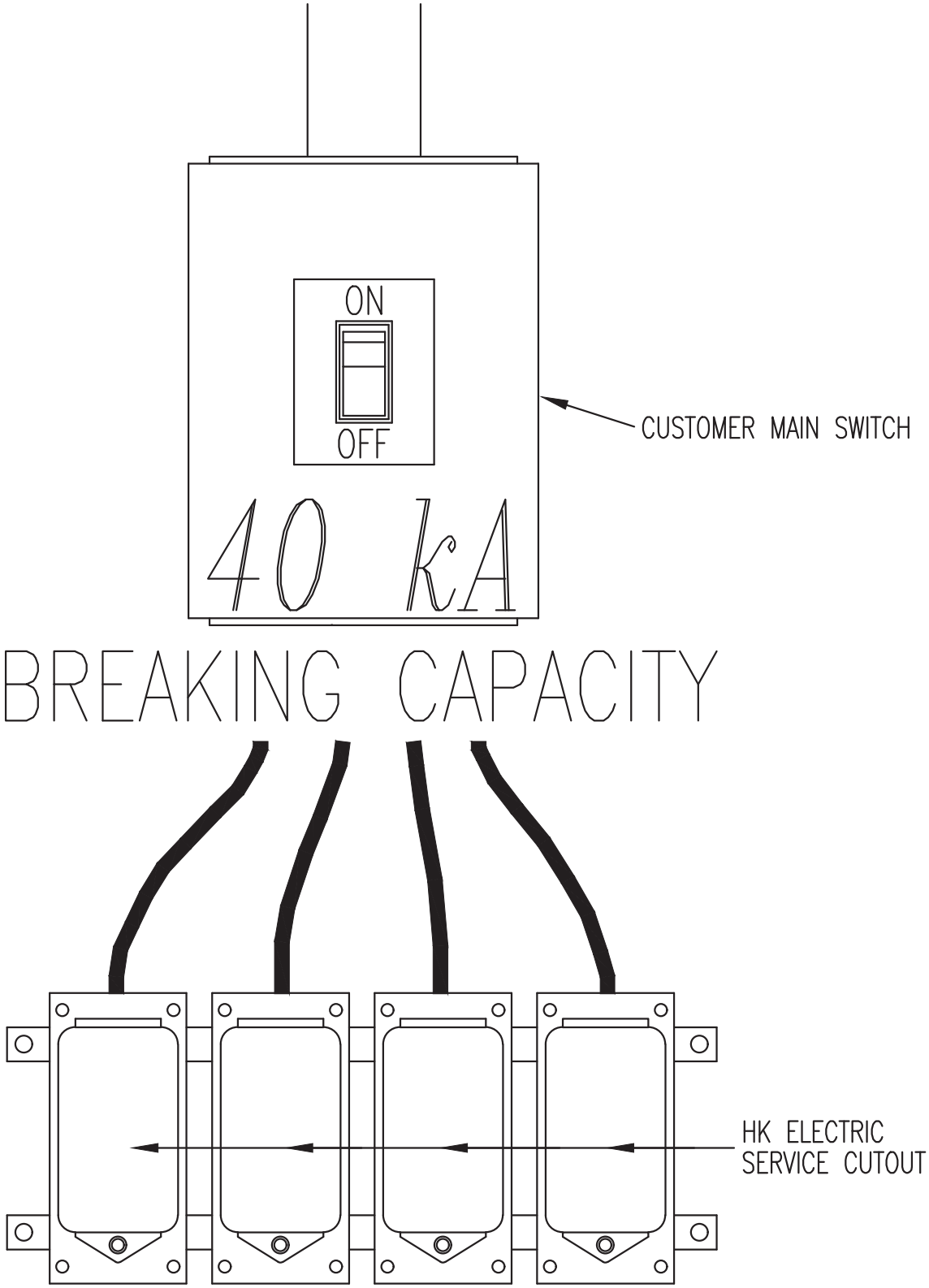

WHERE SUPPLY IS TAKEN DIRECTLY FROM HK ELECTRIC SERVICE CABLE, THE MAIN SWITCH SHALL HAVE A SHORT-CIRCUIT BREAKING CAPACITY OF 40 kA SYMMETRICAL AT LOW VOLTAGE.

Drg. No. GCS/6/11

BREAKING CAPACITY OF CUSTOMER MAIN SWITCH

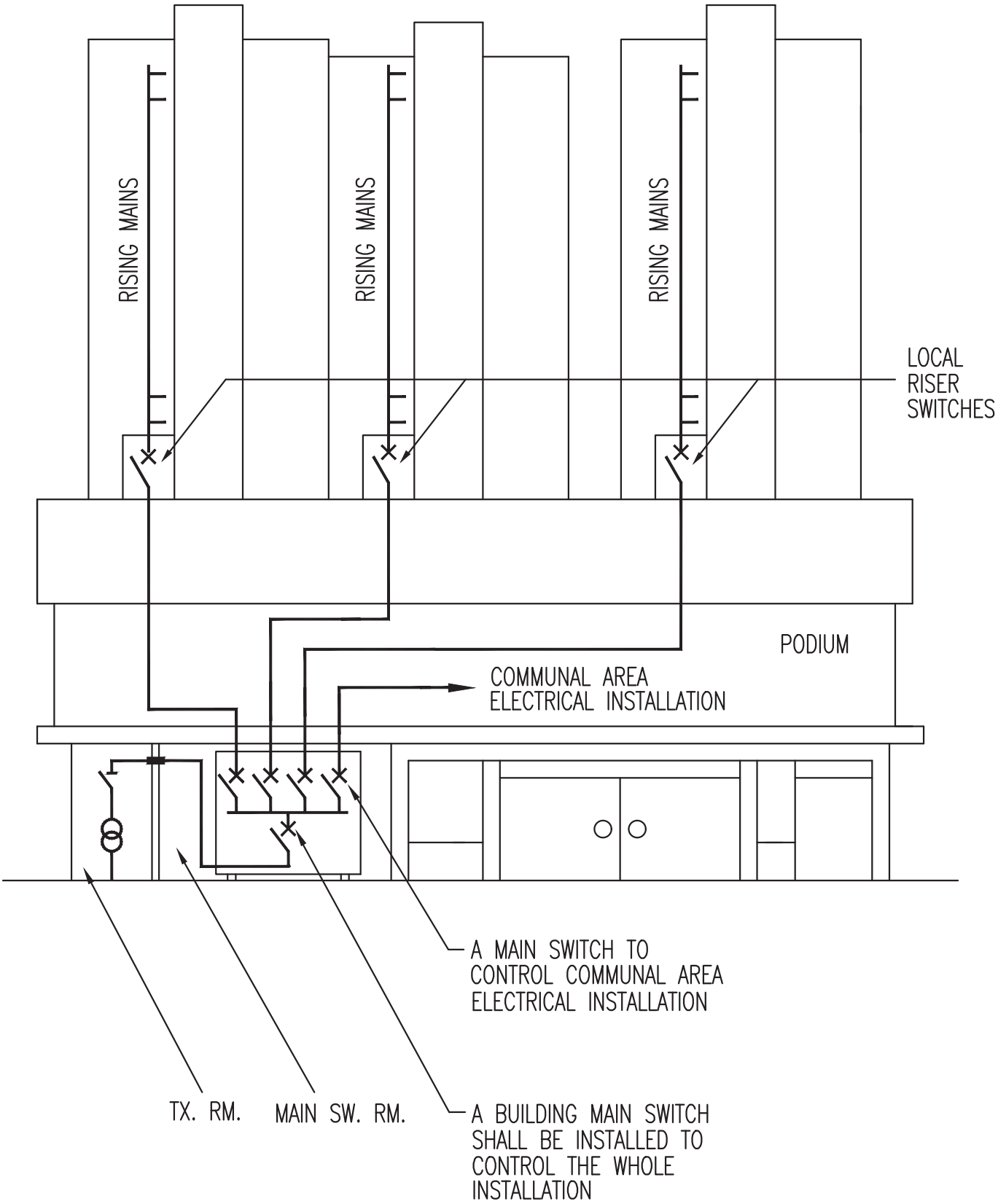

Drg. No. GCS/6/12

MAIN SWITCH/LOCAL RISER SWITCH ARRANGEMENT FOR BUILDINGS

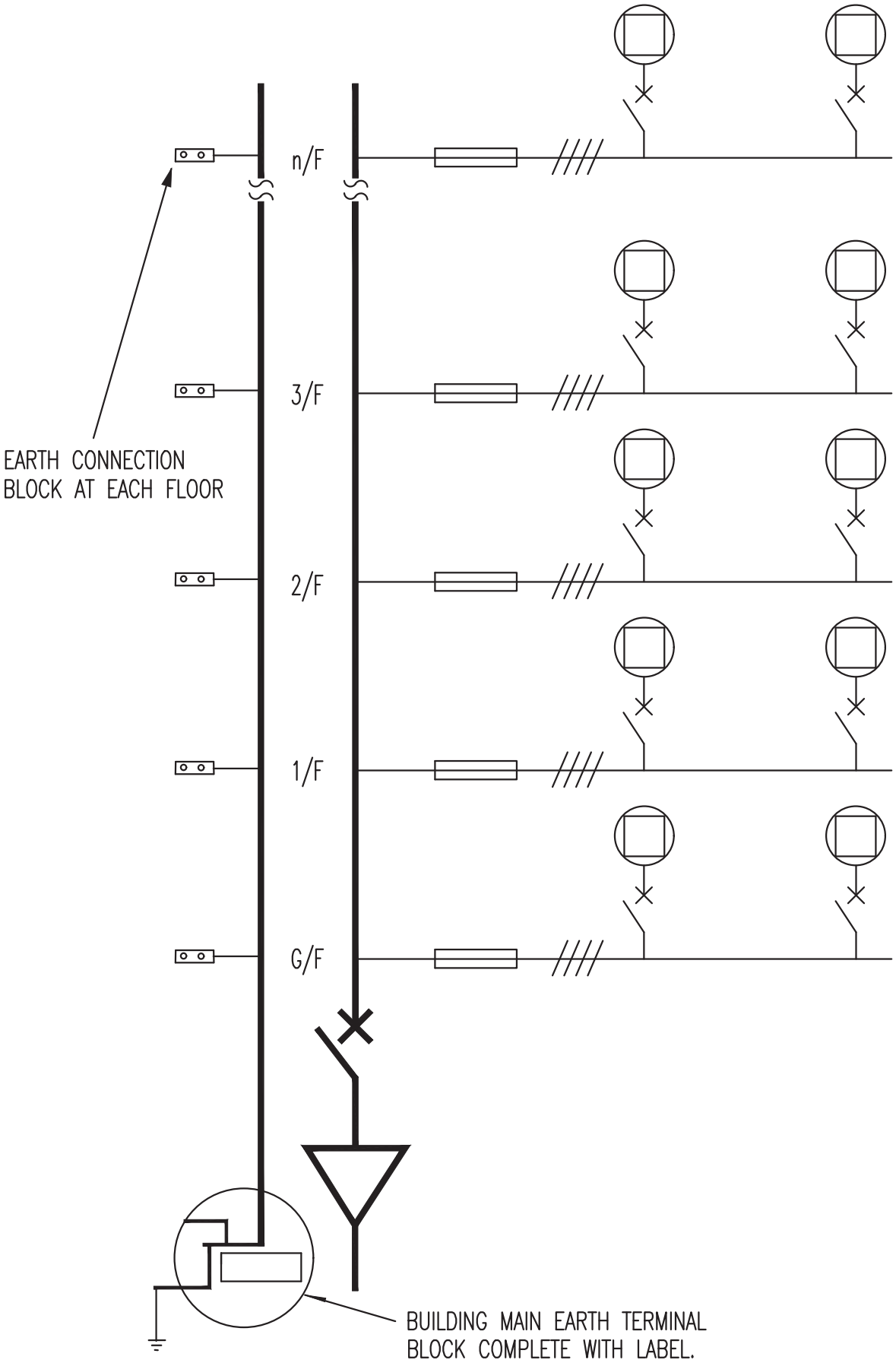

Drg. No. GCS/6/13

MULTI-CUSTOMER RISING MAINS SYSTEM

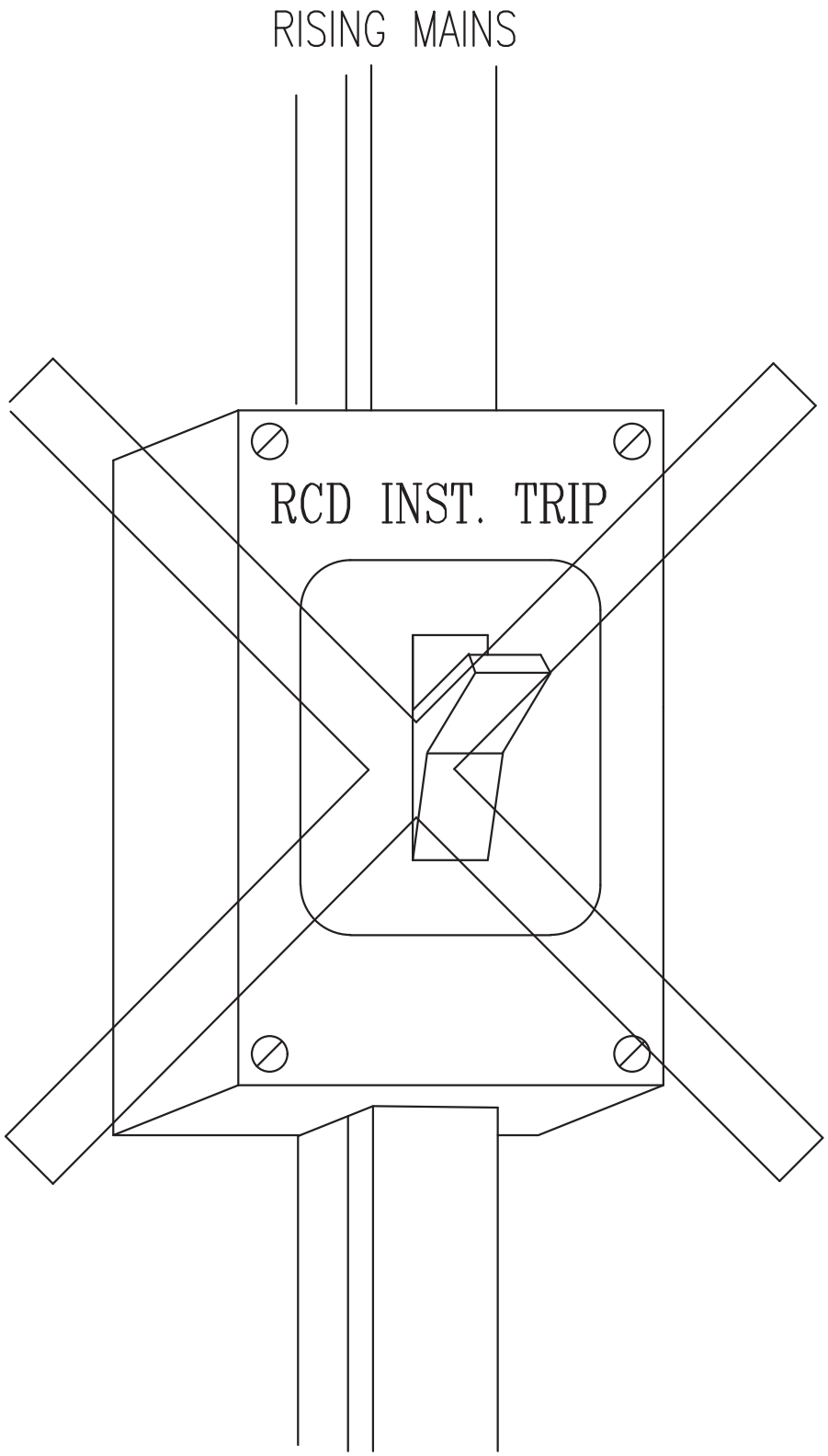

INSTANTANEOUS TRYE RCD SHALL NOT BE
USED AS MULTI-CUSTOMER RISER SWITCH.

Drg. No. GCS/6/14

INCORRECT MULTI-CUSTOMER RISER SWITCH

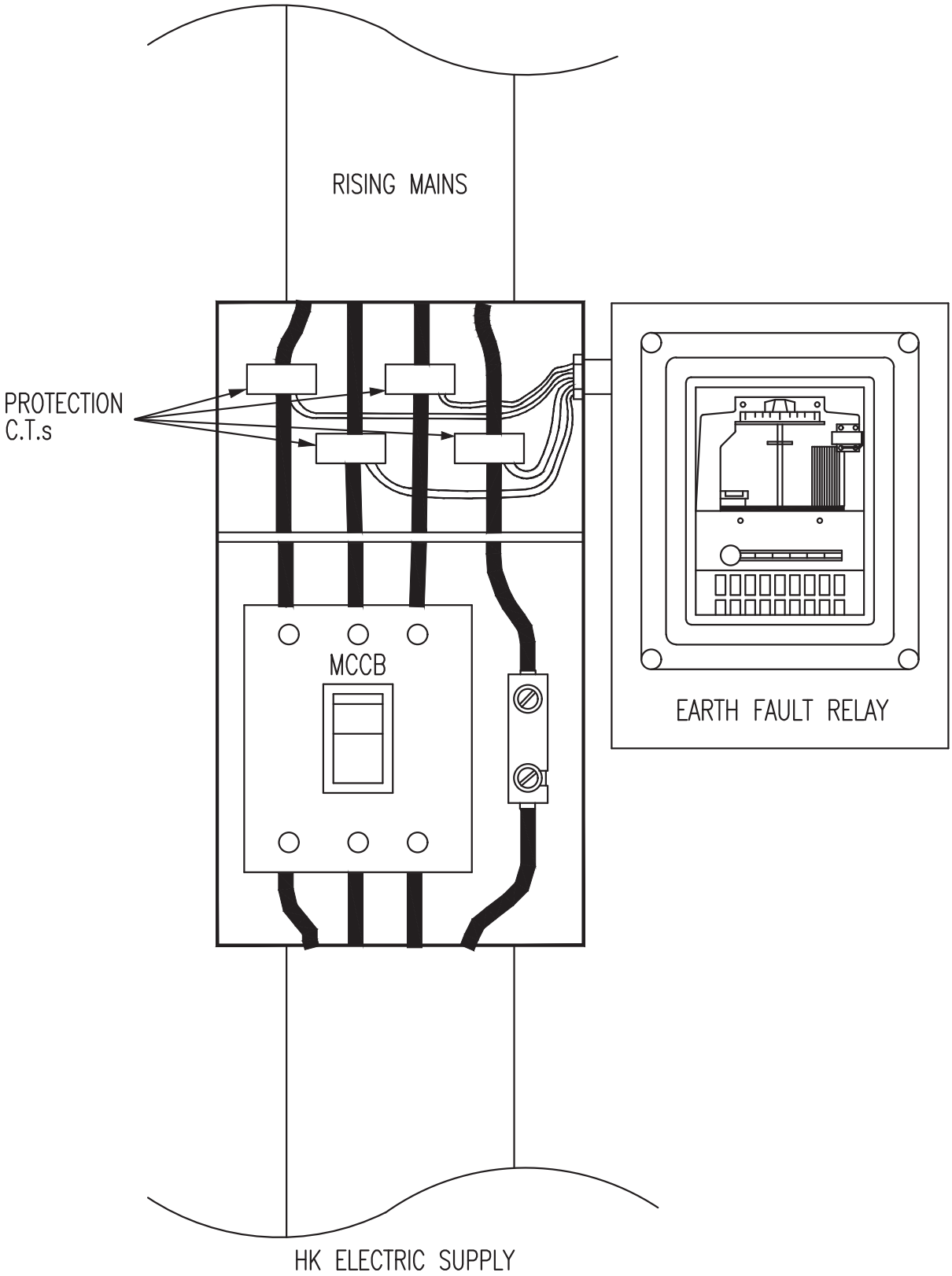

EARTH FAULT RELAY ASSOCIATED WITH PROTECTION C.T.s COULD BE USED TO ACHIEVE AUTOMATIC DISCONNECTION WITHIN 5 SECONDS DURING AN EARTH FAULT

Drg. No. GCS/6/15

EARTH FAULT PROTECTION FOR MULTI-CUSTOMER RISER SWITCH

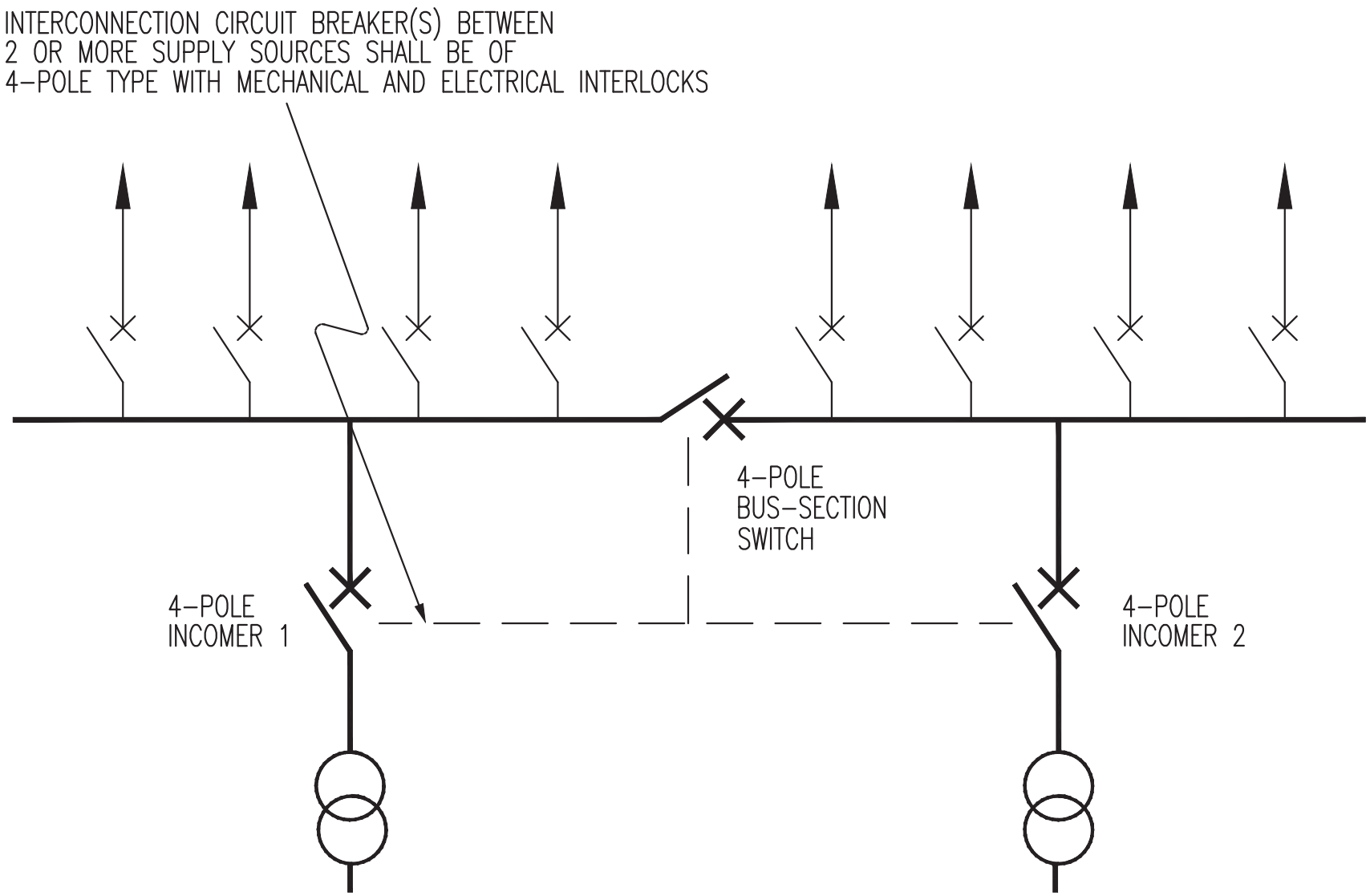

Drg. No. GCS/6/16

ARRANGEMENT OF INTERCONNECTION CIRCUIT BREAKER(S) BETWEEN TWO OR MORE SUPPLY SOURCES

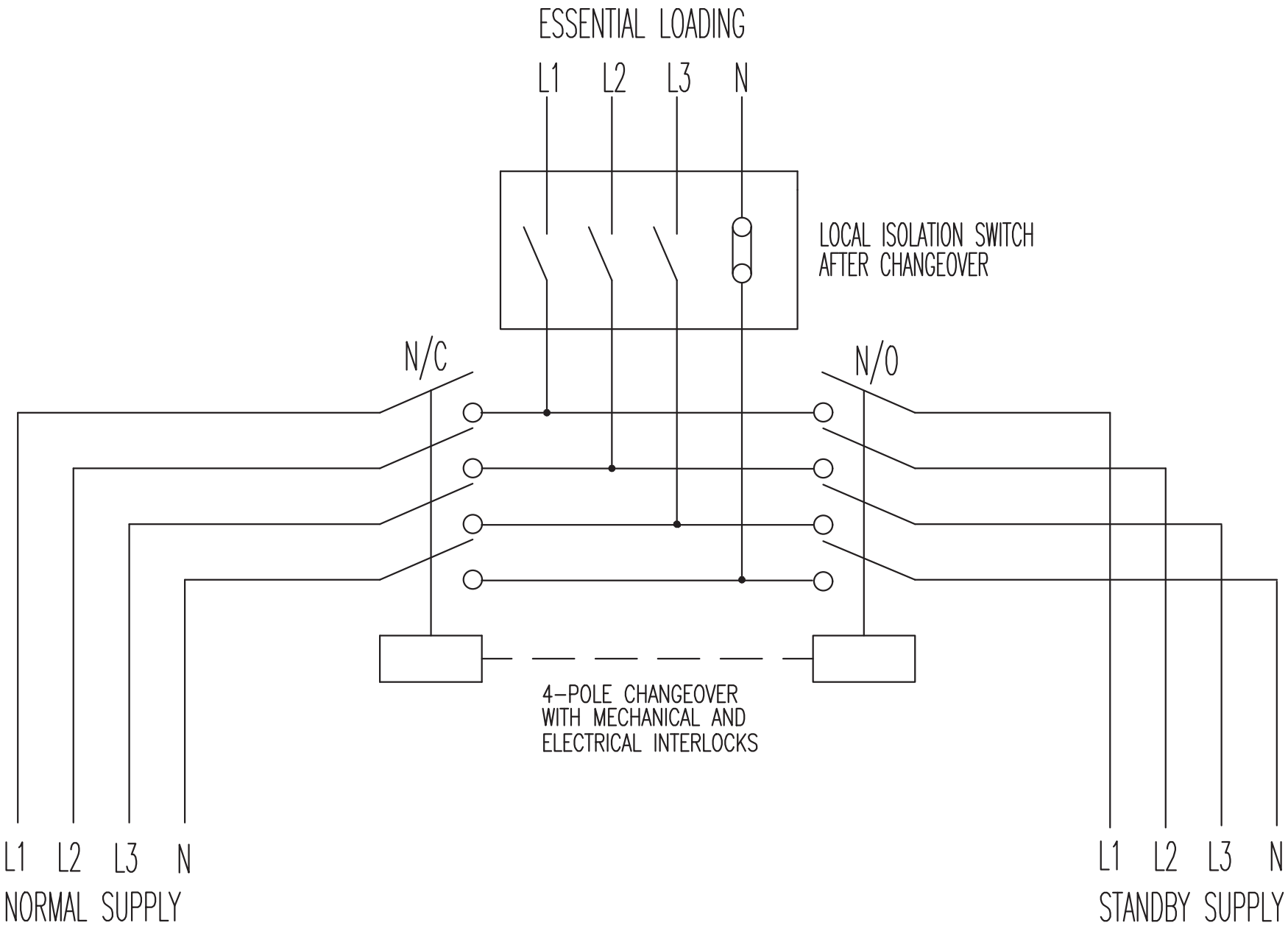

Drg. No. GCS/6/17

CHANGEOVER ARRANGEMENT FOR STANDBY SUPPLY

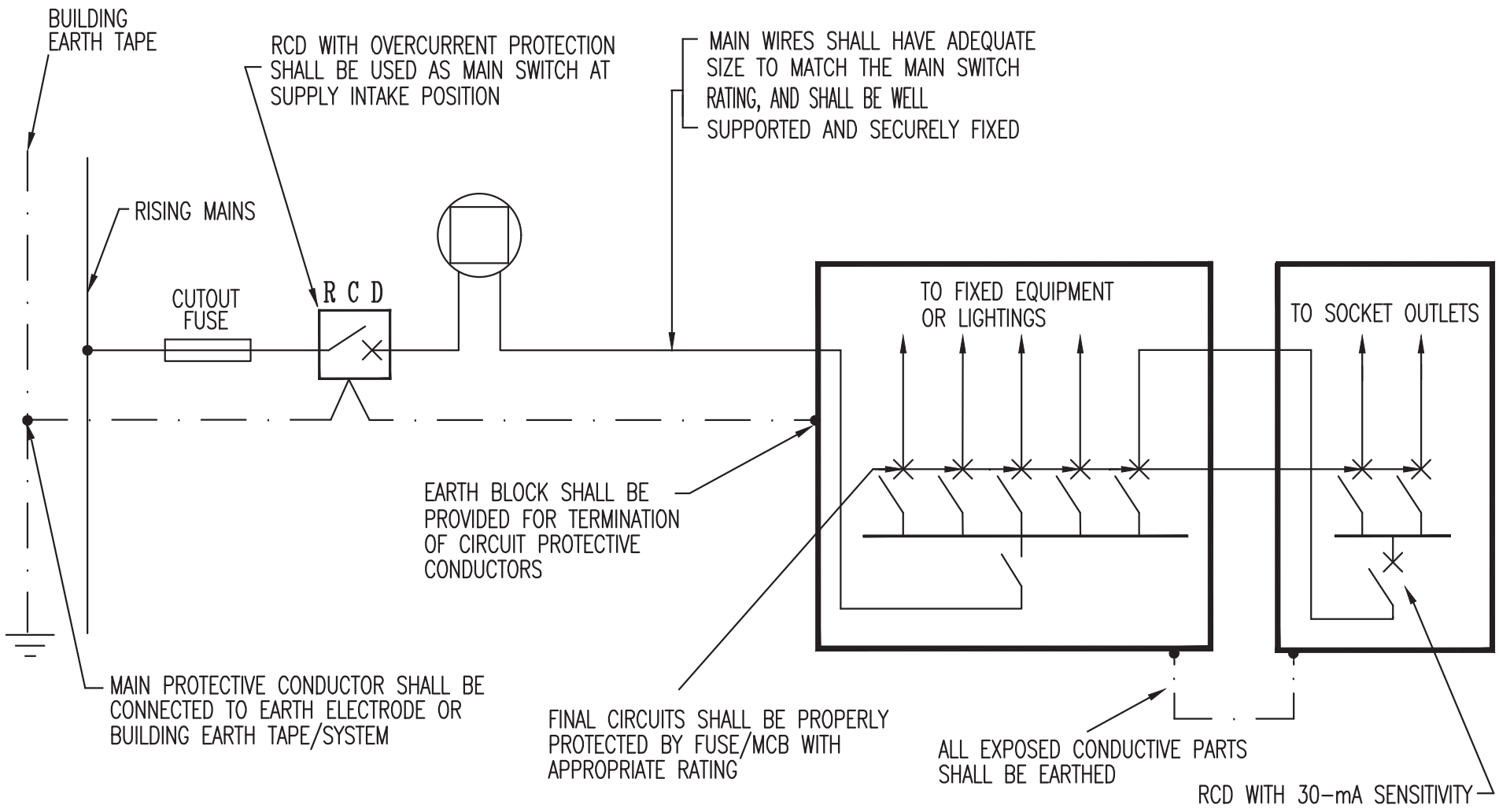

Drg. No. GCS/6/18

BASIC REQUIREMENTS FOR TEMPORARY SUPPLY USED FOR DECORATION PURPOSE

SHEET 1 OF 2

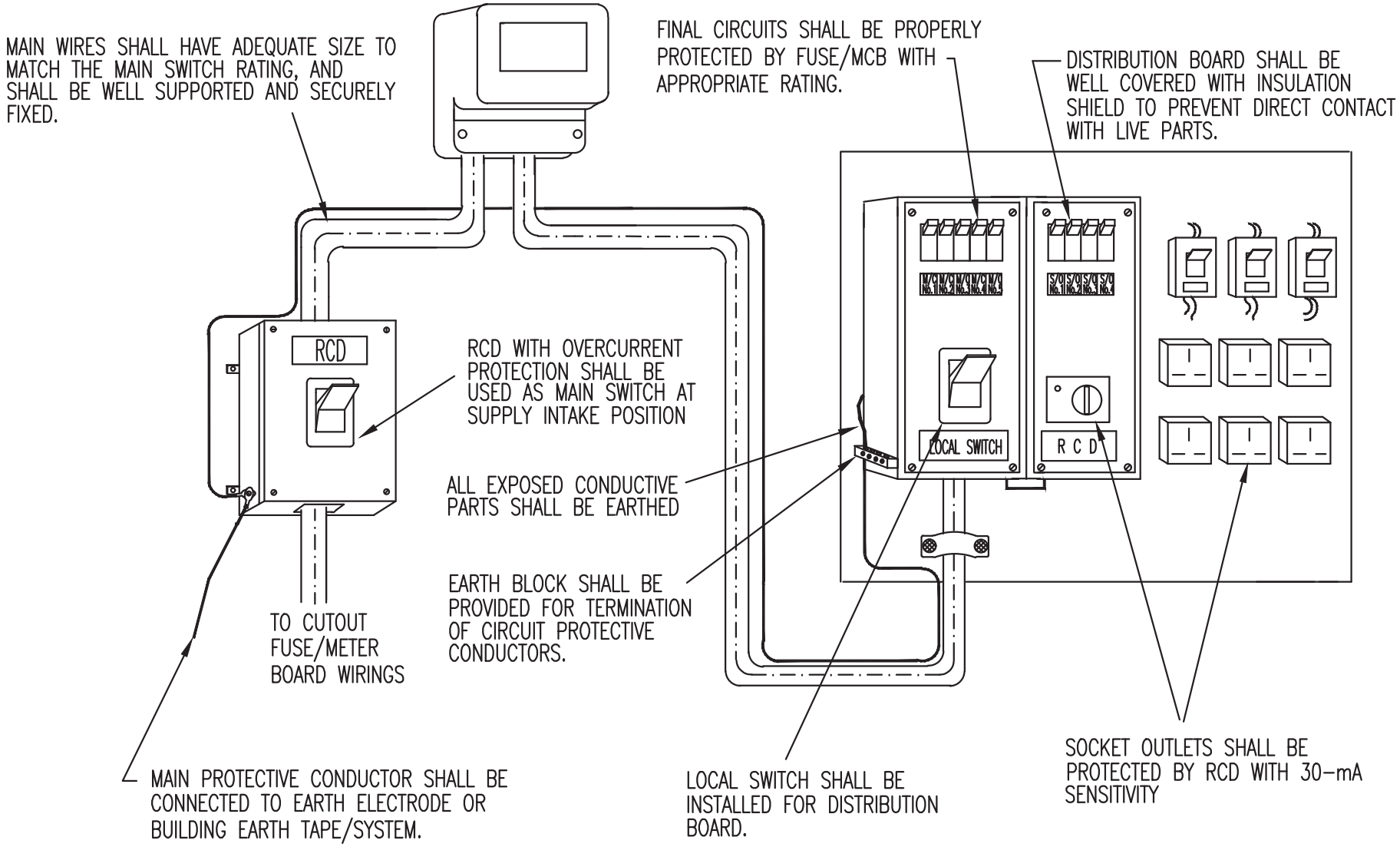

Drg. No. GCS/6/18

BASIC REQUIREMENTS FOR TEMPORARY SUPPLY USED FOR DECORATION PURPOSE

SHEET 2 OF 2

EXAMPLE 1

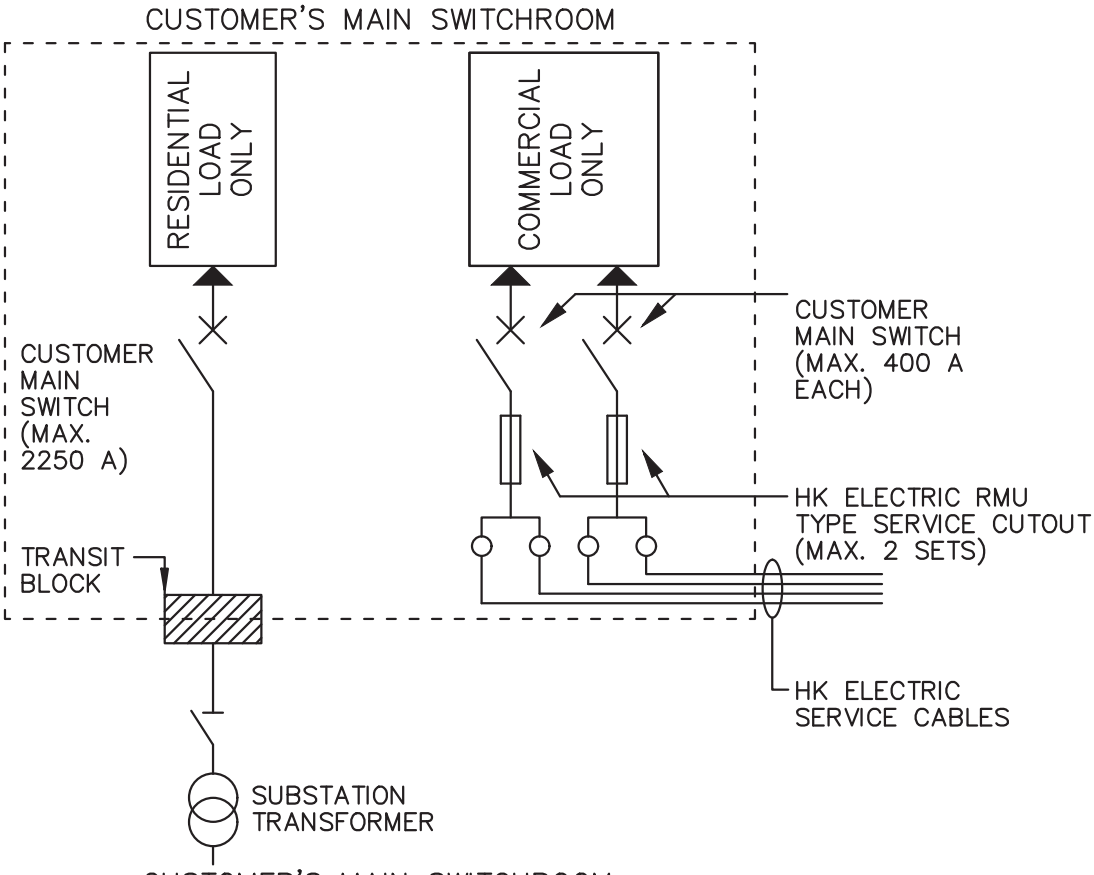

EXAMPLE 2

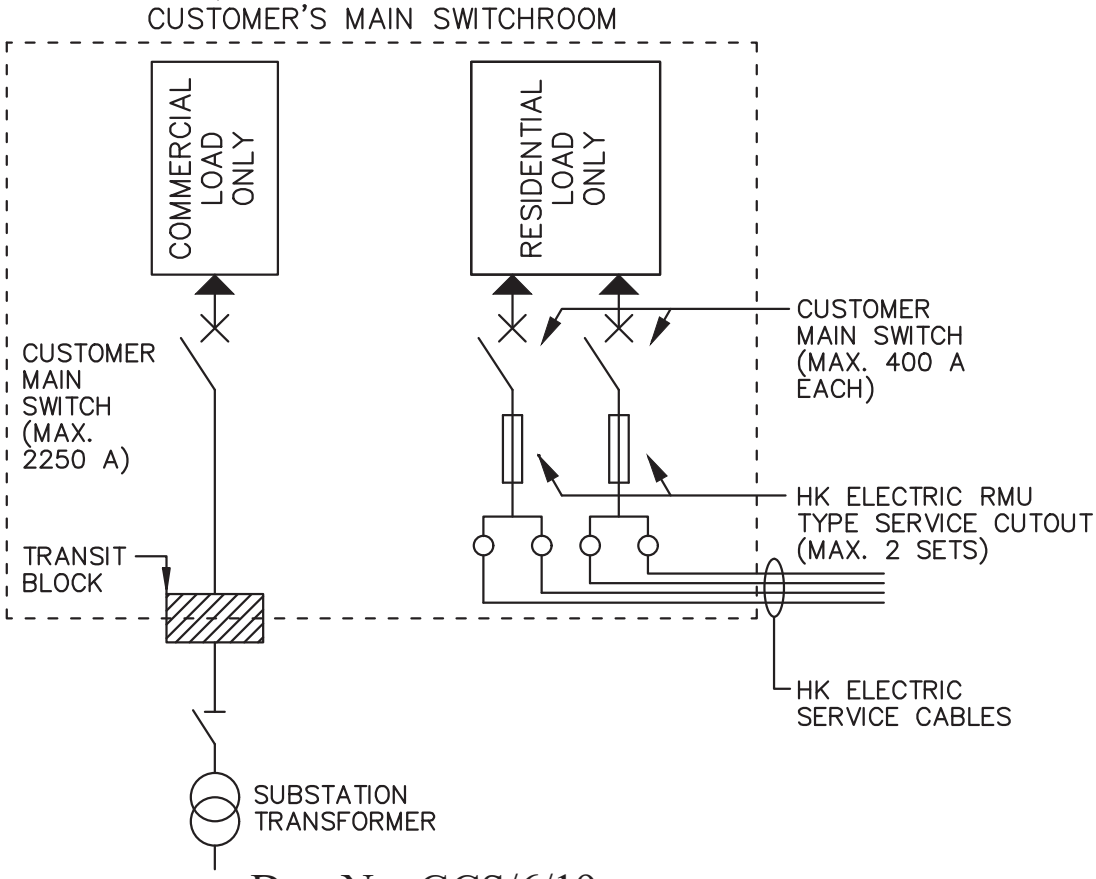

Drg. No. GCS/6/19

RECOMMENDED DESIGN EXAMPLES FOR CONNECTION OF RESIDENTIAL LOAD AND COMMERCIAL LOAD WITHIN THE SAME DEVELOPMENT (P639/06) SHEET 1 OF 2

EXAMPLE 3

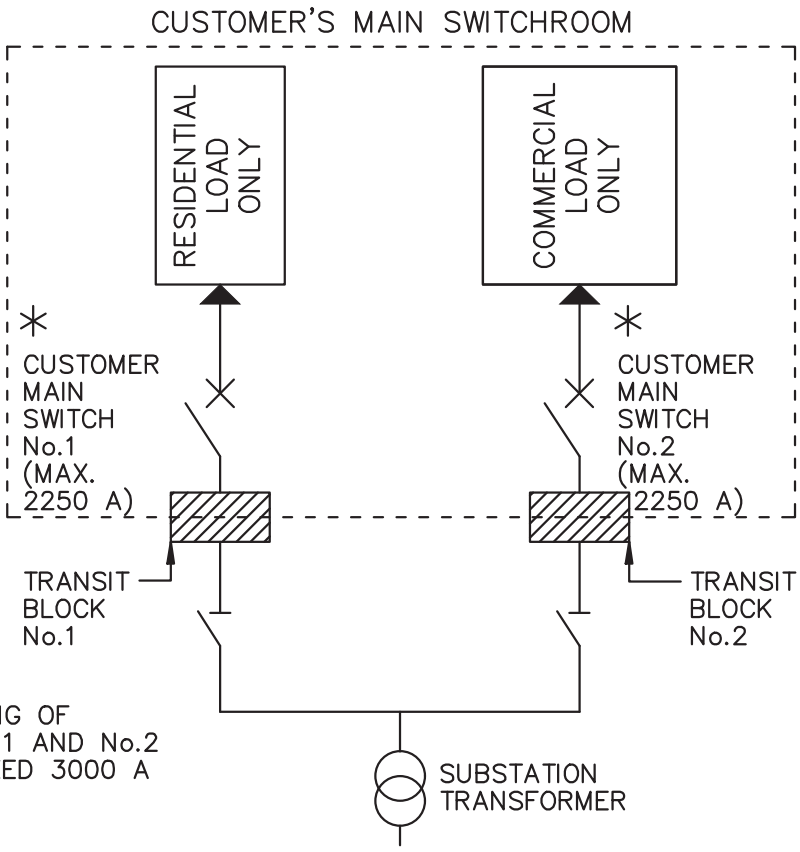

* NOTE: SUMMATED RATING OF MAIN SWITCH No.1 AND No.2 SHALL NOT EXCEED 3000 A

EXAMPLE 4

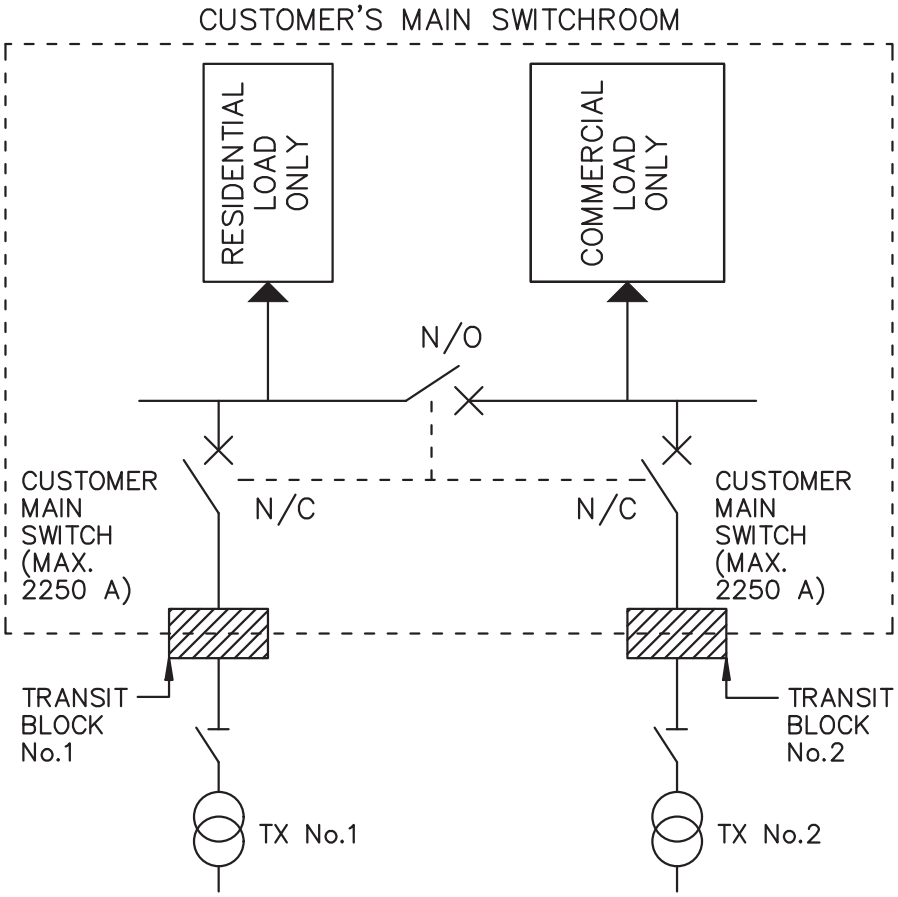

Drg. No. GCS/6/19

RECOMMENDED DESIGN EXAMPLES FOR CONNECTION OF RESIDENTIAL LOAD AND COMMERCIAL LOAD WITHIN THE SAME DEVELOPMENT (P639/06) SHEET 2 OF 2

CHAPTER 7

ELECTRIC VEHICLE CHARGING FACILITIES

CHAPTER 7

ELECTRIC VEHICLE CHARGING FACILITIES

7.1 Smart Power EV Charging Solution (SPECS)

1. To help reduce carbon emissions, improve roadside air quality and support Hong Kong's development into a low-carbon and smart city, HK Electric has been promoting the use of EVs. On top of providing the public with free EV charging service, HK Electric also renders a one-stop free SPECS service to assist customers in implementing EV charging solutions. Detailed scope of services, useful information about EV charging solution and HK Electric EV Charging Stations are provided at HK Electric website (www.hkelectric.com/EV-en).

2. Customers may submit an Online Service Request Form available at the above website requesting our free SPECS service. For enquiry, customers may contact HK Electric at 2510 2701 or EV@hkelectric.com. Please refer to Drg. No. GCS/7/01 for the workflow for implementing EV charging solution.

7.2 Requirements for Electric Vehicle (EV) Charging Facilities

1. General Arrangement

   a. EV charging facilities are fixed electrical installations and shall comply with the relevant requirements of the Electricity Ordinance (Cap. 406) and its subsidiary regulations.

   b. Electrical work on EV charging facilities including design, installation, commissioning, inspection, testing, maintenance, modification and repair shall be carried out by registered electrical contractors and registered electrical workers of the appropriate grade.

   c. All EV charging facilities which are connected to, or intended to be connected to HK Electric supply of electricity must comply with HK Electric Supply Rules, the latest edition of Code of Practice for the Electricity (Wiring) Regulations and other relevant Government Ordinances and Regulations.

d. The electrical installations shall comply with the "Technical Guidelines on Charging Facilities for Electric Vehicles" and "Technical Guidelines for Electric Vehicle (EV) Charging-enabling for Car Parks of New Building Developments" published by the Electrical and Mechanical Services Department and Environment Bureau/Electrical and Mechanical Services Department respectively.

e. EV charging facilities shall be supplied and metered appropriately as per HK Electric requirements.

f. The Tariff Meter Communication (TMC) Infrastructure provisions shall be made by customers during the design and construction stage. The proposed arrangements of facilities for TMC infrastructure provisions should be submitted to HK Electric for consideration during the design stage. For details, please refer to Drg. No. GCS/5/24.

g. Electrical loads of EV charging facilities should be evenly distributed among the three phases as reasonably practicable.

h. Fault Protection

   i. Except for circuits using the protective measure of electrical separation, each charging point shall be protected by its own RCD of at least Type A, having the characteristic specified in Code 11J of the latest edition of Code of Practice for the Electricity (Wiring) Regulations.

   ii. Each charging point incorporating a socket outlet or connector complying with the IEC 62196 series, protective measures against DC fault current shall be taken, except where provided by the EV charging equipment. The appropriate measures, for each connection point, shall be as follows:

      - RCD Type B; or

      - RCD Type A and appropriate equipment that provides disconnection of the supply in case of DC fault current above 6 mA.

i. Electric cable of each final circuit shall be selected based on the design current of the EV charging facilities and taking into account the constraint of voltage drop in the circuit in accordance with the relevant requirements of the latest Code of Practice for the Electricity (Wiring) Regulations. A larger size electric cable may be used to facilitate future upgrade. In connection with this, a conductor size suitable for carrying a minimum rated current of 32 A is recommended.

j. Means of preventing unauthorized usage of EV charging facilities such as housing the socket outlet in a padlocked box or using an access card for energizing charging facilities may be provided as necessary.

2. Metering Arrangement

a. Tariff metering equipment is important to HK Electric and customers in the determination of electricity consumption. Tariff meters shall be installed in a clean and dry indoor location which is not exposed to weather, mechanical damage, vibrations, extremes of temperature or dampness etc. They shall be under conditions which are suitable for meter installation, reading and maintenance. The meter position shall be readily accessible from communal area at all times in accordance with Chapter 5 – Metering Requirements.

b. Supply to EV charging facilities shall normally be derived from the electric supply equipment installed on the same floor level. HK Electric meters for individual parking spaces shall be installed inside a communal meter room at each car park level.

c. If a meter room is not available, a group of meters may be installed inside a meter cubicle/enclosure subject to the following conditions:

i. A meter cubicle/enclosure shall be installed at a suitable location within the car park area with prior agreement from HK Electric. Typical arrangement of meter cubicle/enclosure can be referred to Drg. No. GCS/7/02.

ii. The following diagrams shall be posted at the front over of the meter cubicle/enclosure of the corresponding supply zone:

- Layout drawing showing the location and carpark number for each parking space with EV charging facilities
- LV schematic diagram

Example of the above diagrams can be referred to Drg No. GCS/7/03.

iii. Safety poles with yellow/black marking or tape shall be erected at least 1,000 mm in front of the meter cubicle/enclosure in order to provide clear delineation of working boundary. Safety poles shall be located in coordination with the meter cubicle/ enclosure, so it would allow easy access for working personnel. Typical arrangement of safety pole can be referred to Drg. No. GCS/7/04.

d. HK Electric meter shall be electrically connected at a position immediately after the customer main switch and the metering point of an installation shall be at a position as close to the origin of the supply source as practicable.

e. Meter position shall satisfy the requirements for meter reading, meter fixing and meter maintenance. For details, please refer to Drg. No. GCS/5/14, GCS/5/17 and GCS/5/18.

f. A meter may be applied for each parking space with EV charging facilities (Refer to Drg. No. GCS/7/05).

g. A single meter may also be applied for several parking spaces with EV charging facilities (Refer to Drg. No. GCS/7/06).

h. HK Electric may allow customers to install their check meters/ timers for recovering electricity consumption charges for EV charging via metered communal installations (Refer to Drg. No. GCS/7/07). This is restricted for EV charging installations only and customers are required to obtain prior approval of HK Electric by submitting a standard form (Form EV1). The recovery of electricity consumption charges for non-EV charging installations is not allowed.

7.3 Schedule of Drawings – Electric Vehicle Charging Facilities

Drawing No.	Drawing Title
GCS/7/01	Workflow for Implementing EV Charging Solution
GCS/7/02	Typical Arrangement of Meter Cubicle/Enclosure
GCS/7/03	Example of Layout Drawing Showing the Location and Carpark Number for Each Parking Space with EV Charging Facilities and LV Schematic Diagram
GCS/7/04	Typical Arrangement of Safety Pole
GCS/7/05	Metering Arrangement of a Meter for Each Parking Space with EV Charging Facilities
GCS/7/06	Metering Arrangement of a Single Meter for Several Parking Spaces with EV Charging Facilities
GCS/7/07	Arrangement of Installing Check Meters/Timers by Customers for Recovering Electricity Consumption Charges for EV Charging via Metered Communal Installations

For application and enquiry for implementing EV charging solution, please call
Smart Power EV Charging Solution hotline **2510 2701** or email to **EV@hkelectric.com**

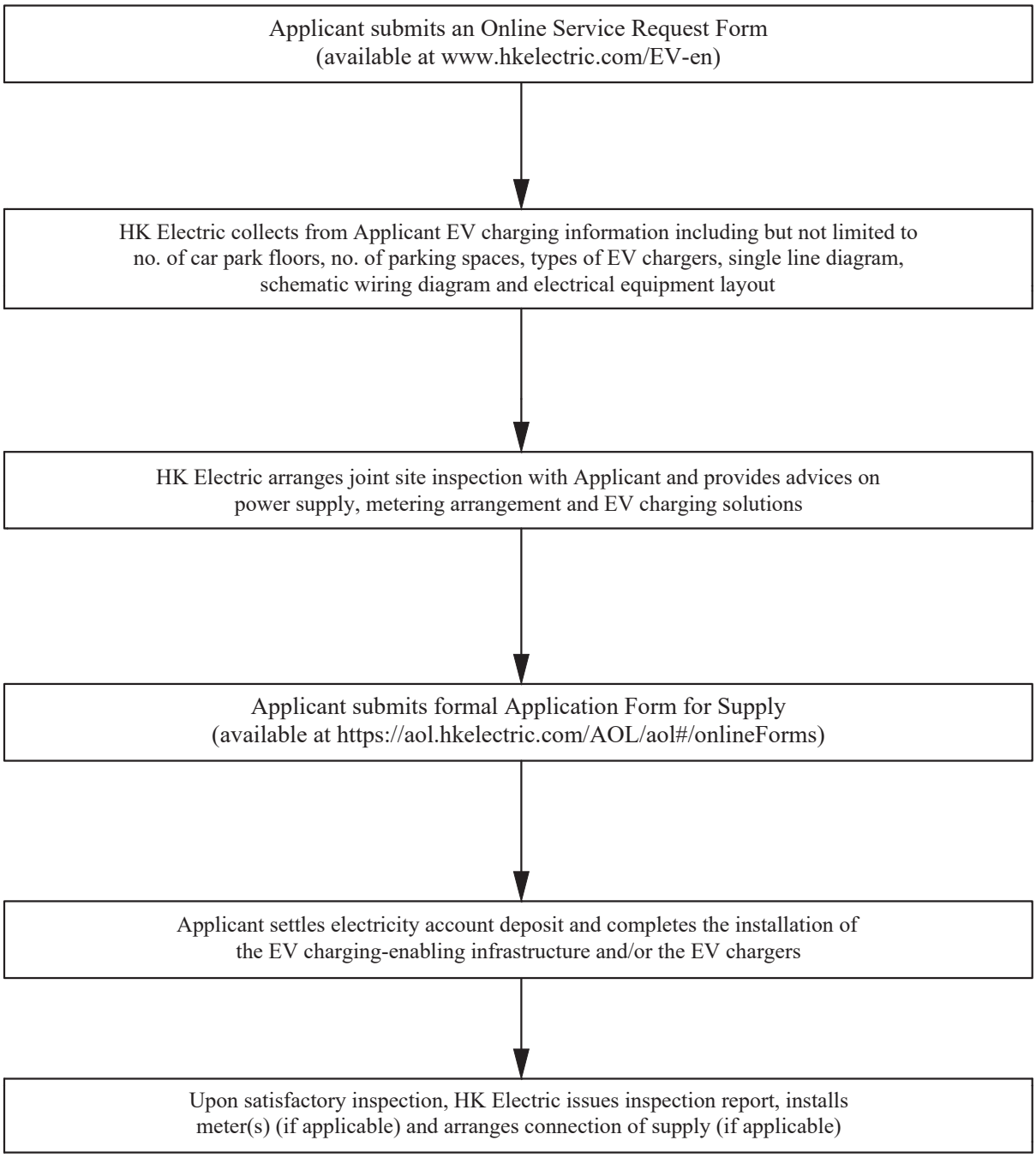

Drg. No. GCS/7/01

WORKFLOW FOR IMPLEMENTING EV CHARGING SOLUTION

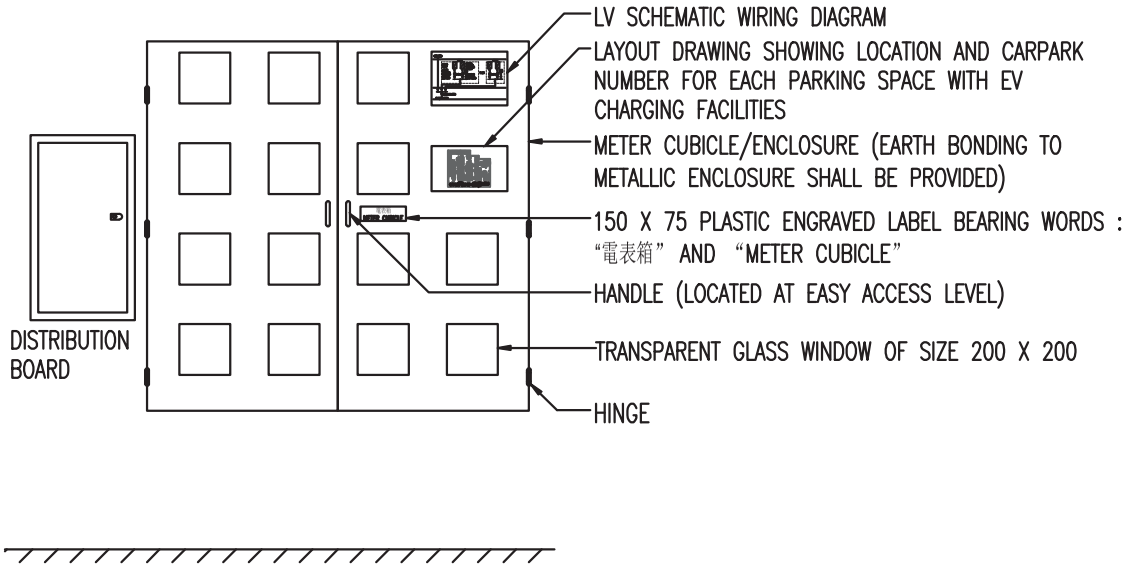

FRONT VIEW

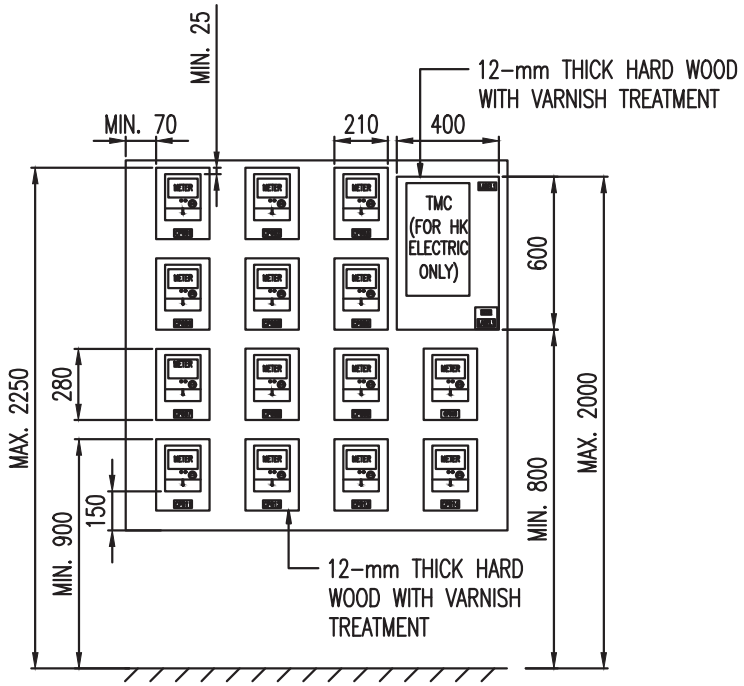

INSIDE FRONT VIEW

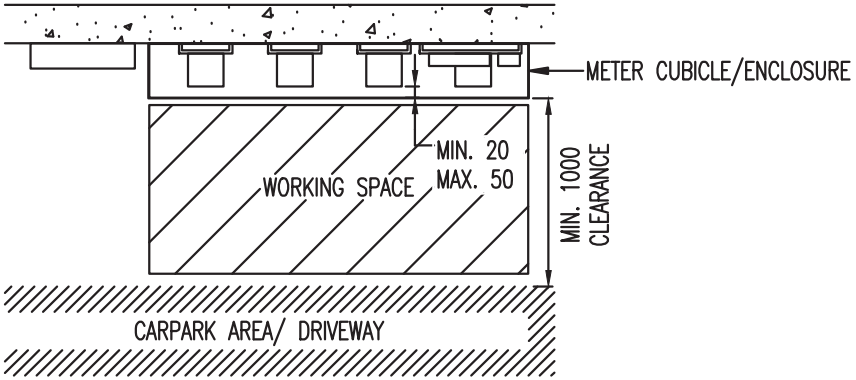

PLAN

LEGEND	DESCRIPTION:
▪	5-A FUSED CONNECTION UNIT WITH EARTHING TERMINAL
CP001	ADDRESS LABEL (120 X 60)
LABEL1	50 × 30, 5: 請勿干擾 (港燈專用) DO NOT DISTURB (FOR HK ELECTRIC ONLY)

NOTE : ALL DIMENSIONS ARE IN mm.

Drg. No. GCS/7/02

TYPICAL ARRANGEMENT OF METER CUBICLE/ENCLOSURE

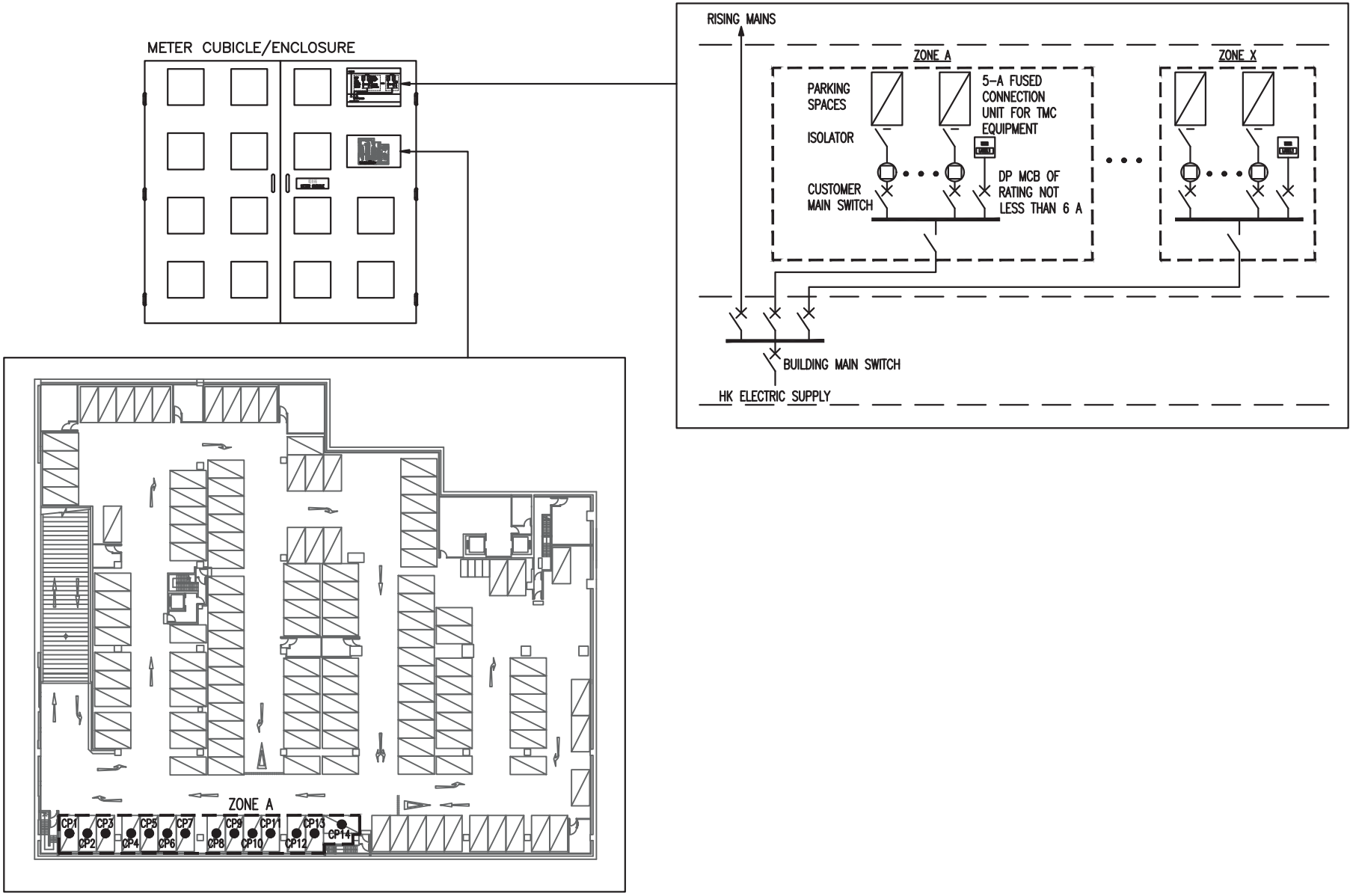

Drg. No. GCS/7/03

EXAMPLE OF LAYOUT DRAWING SHOWING THE LOCATION AND CARPARK NUMBER FOR EACH PARKING SPACE WITH EV CHARGING FACILITIES AND LV SCHEMATIC DIAGRAM

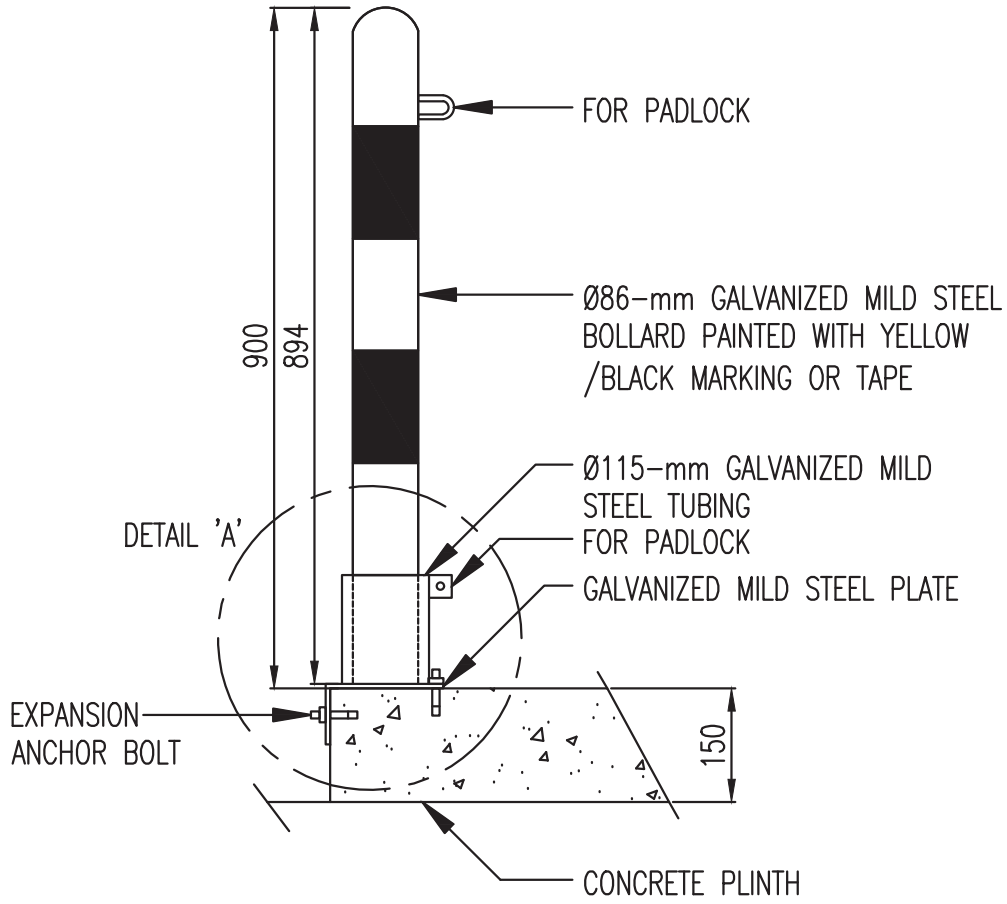

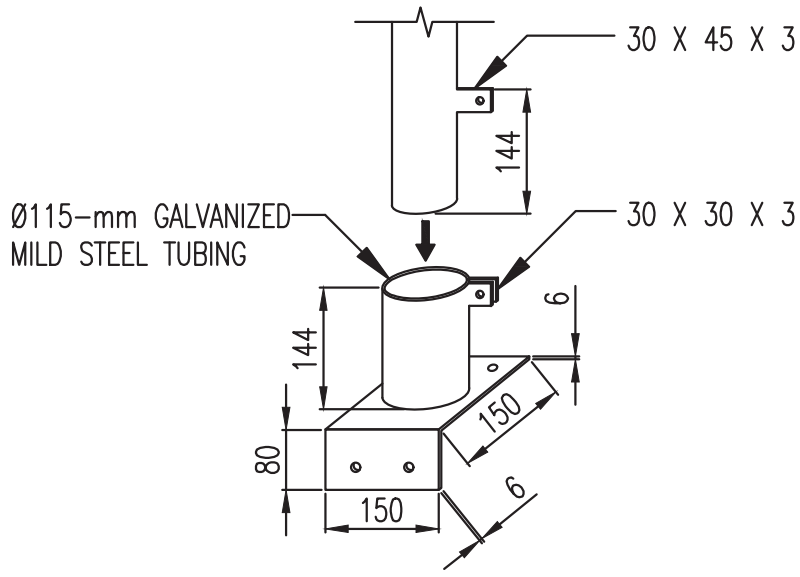

DETAIL 'A'

NOTE : ALL DIMENSIONS ARE IN mm.

Drg. No. GCS/7/04

TYPICAL ARRANGEMENT OF SAFETY POLE

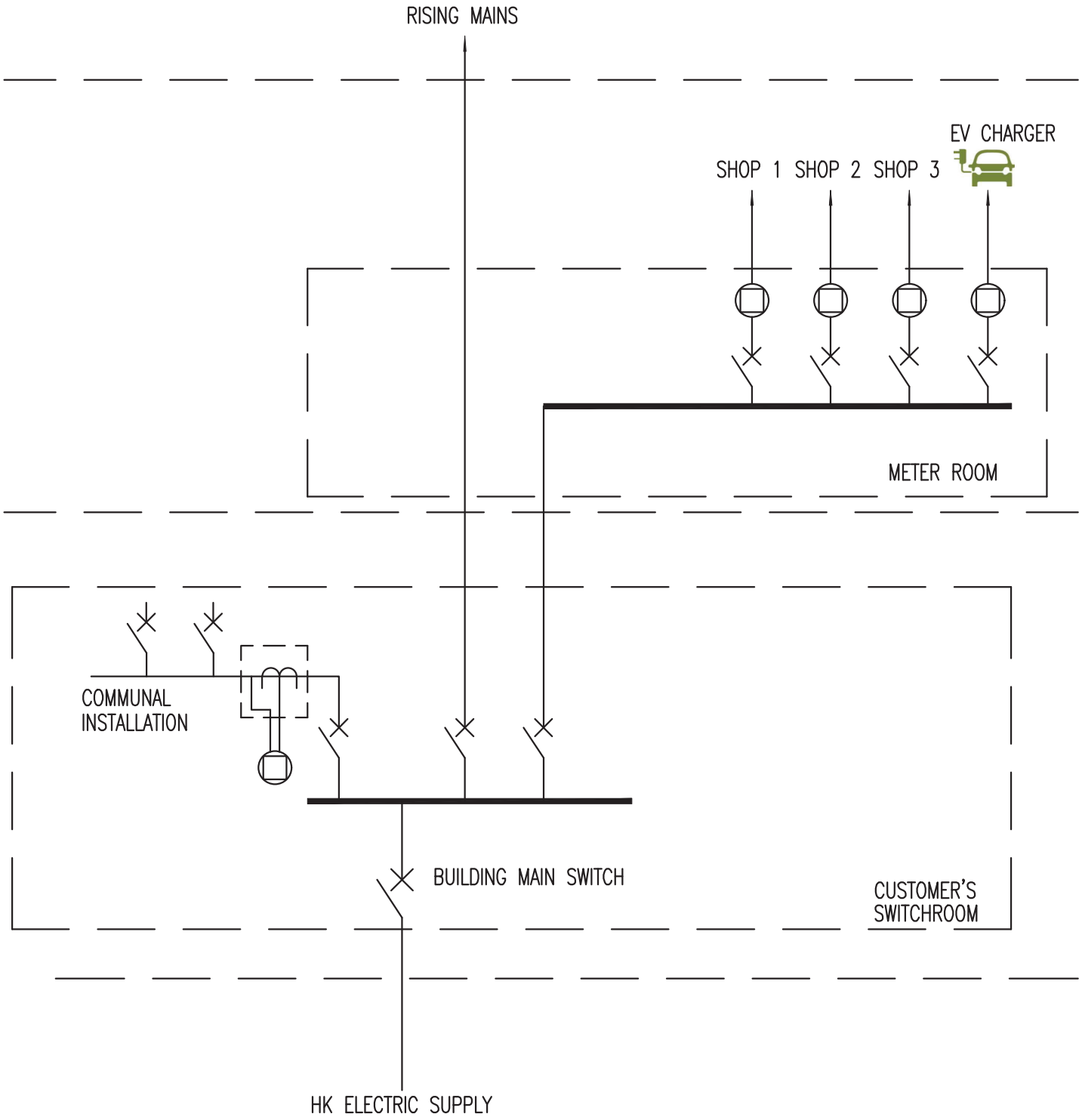

Drg. No. GCS/7/05

METERING ARRANGEMENT OF A METER FOR EACH PARKING SPACE WITH EV CHARGING FACILITIES

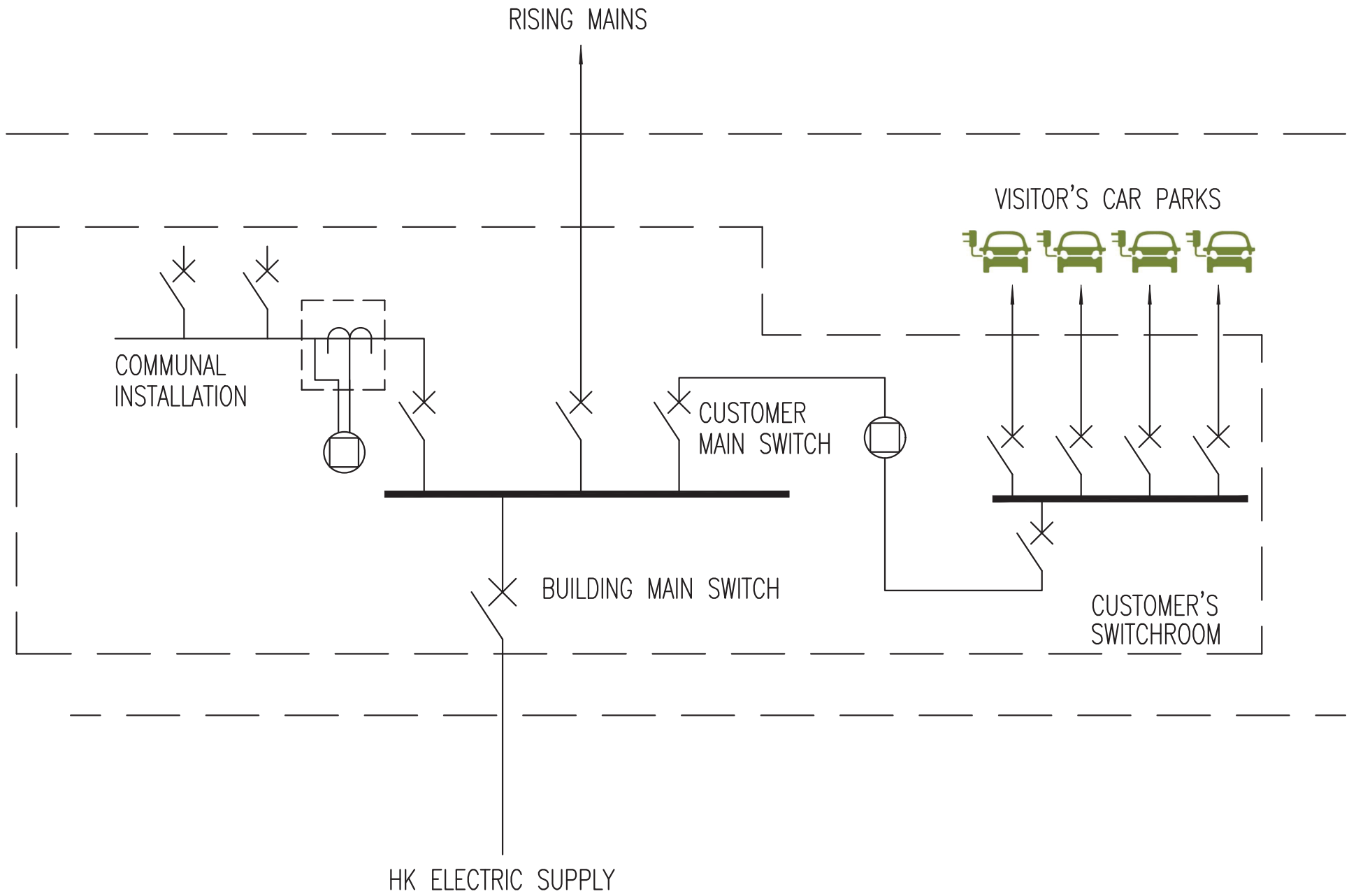

Drg. No. GCS/7/06

METERING ARRANGEMENT OF A SINGLE METER FOR SEVERAL PARKING SPACES WITH EV CHARGING FACILITIES

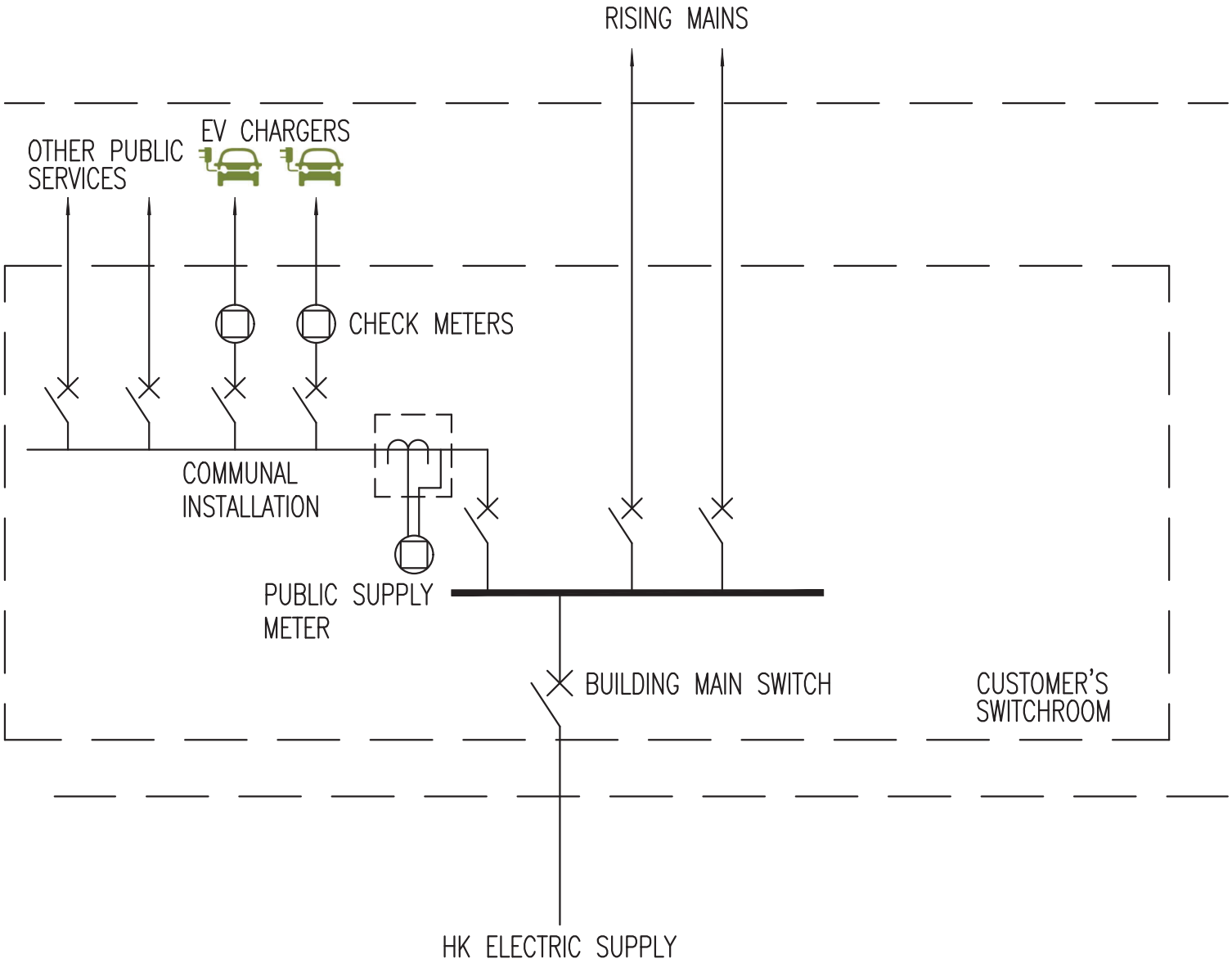

Drg. No. GCS/7/07

ARRANGEMENT OF INSTALLING CHECK METERS / TIMERS BY CUSTOMERS FOR RECOVERING ELECTRICITY CONSUMPTION CHARGES FOR EV CHARGING VIA METERED COMMUNAL INSTALLATIONS

CHAPTER 8

INSPECTION OF CUSTOMER'S INSTALLATION

CHAPTER 8

INSPECTION OF CUSTOMER'S INSTALLATION

8.1 General

The purpose of inspecting customer's installation is to ensure that

1. Section 12(1) of the Electricity Ordinance is complied with, i.e. "An Electricity Supplier shall not connect the electricity supply to a fixed electrical installation unless he has inspected the installation and is satisfied that it is safe to do so".

2. The interface between the customer's installation and HK Electric equipment is suitably designed and constructed for connection of supply.

3. REC/REW shall install the electrical installation in compliance with HK Electric Supply Rules, the latest edition of Code of Practice for the Electricity (Wiring) Regulations (CoP) and other relevant Government Ordinances and Regulations.

8.2 Inspection Criteria

Supply shall not be connected if any departure is outstanding.

8.3 Departure Check Lists

To assist customer/REC/REW to inspect their installation and rectify the departures prior to HK Electric inspection, some general departures and examples of acceptable arrangements (noted in ◎) for common departures are listed below for reference:

1. Departures from The Electricity Ordinance

   a. Main Switch

Code	Description
BMXQ	Circuit breaker inserted in neutral circuit not inherently linked to cut all live conductors.
BSVE	Insulation resistance less than 1 mega ohm.

BXWN Weatherproof outdoor cubicle for housing main switch and distribution board not provided.

CDQL Main switch live parts not properly enclosed or insulated.

CIXI Main cables not mechanically protected.

- *XLPE/PVC or PVC/PVC cable should be used.*
- *Non-sheathed cables should be protected by conduit or trunking.*

CPRL Protective conductors/earthing conductors undersized.

- *Conductor size should refer to Codes 11C and 11H of CoP.*

CWQS Category 2 circuits not segregated from circuits of other categories.

- *Circuit segregation should be arranged according to Table 5(1) of CoP.*

DLXF A label indicating in English and Chinese "Safety Earth Connection - Do not Remove" at all main earthing and bonding connections not provided.

EIXF Earth electrode (with inspection pit) not provided.

ELVE Earth fault loop impedance above permissible value.

- *Maximum permissible earth fault loop impedance should refer to Code 11I of CoP.*

EMXC Customer's earthing system not bonded to Company's earthing terminal with removable link or equivalent means for isolation.

FHXM Fuse installed in neutral circuit.

MWBJ The main cable defective.

MWIE Main cable without phase identification.

MWPE Main cable connected up with incorrect polarity.

MWRH Main cable undersized when compared to main switch rating.

MZDJ The meter board wirings defective.

NLXF Copper link not installed in neutral circuit at main switch.

🎯 *4-pole or TP&N main switch should be used for three-phase installation.*

PPTG Main incoming water/gas pipe not bonded to earth.

RDVF RCD not installed as required.

SCFD Change-over device defective.

SDXF Double-pole main switch not installed for single-phase installation.

SMBJ Main switch (including all associated protective devices) defective.

SMXC Main switch exposed metal parts not earthed.

SWSL Main switch with inadequate short circuit breaking capacity.

🎯 *Minimum breaking capacities of overcurrent protective devices and/or backup fuses should be installed according to Table 9(2) of CoP.*

b. <u>Final Circuits</u>

AECI Lighting fitting and stationary appliances having a heating element inside bathroom not positioned out of the reach by a person using a shower or fixed bath.

AEQI Live parts not inside enclosure or behind barrier or insulated.

AEWN Equipment exposed to weather not of weatherproof type.

AMJF Local switch for motor not provided to cut off all live conductors.

- *Double-pole switch should be used for single-phase motor.*
- *TP, TP&N or four-pole switch should be used for three-phase motor as appropriate.*
- *Plug and socket outlet may be used.*

BRXM Control switch other than approved means installed in bathroom.

- *Insulating cords of cord-operated switch should be used.*

BXXC Metal casing of equipment not earthed.

CFXE Flexible conduit used as circuit protective conductors.

- *Separate protective conductor should be provided inside or outside of the flexible conduit.*

CPML Protective conductor undersized.

- *Conductor size should refer to Code 11C of CoP.*

CTXE 15-A socket outlet (non-industrial type) not connected in an exclusive radial circuit with appropriate fuse or MCB.

CTXF 5-A socket outlet (non-industrial type) not connected in an exclusive radial circuit with appropriate fuse or MCB.

DBEF Proper terminal connectors for circuit protective conductors not provided at distribution board.

DBNE Durable labels not provided at distribution board.

DBQI Distribution board not provided with proper phase barrier and insulation screen.

DBXF Protective conductor not installed at distribution board.

ELHF Earth fault loop impedance for distribution board above permissible value.

🎯 *Maximum permissible earth fault loop impedance should refer to Code 11I of CoP.*

ESZC Supplementary bonding not provided.

FHCD Protective device not matched with the rated conductor in the circuit.

FHNC Fuse installed in neutral circuit at distribution board.

LEPB Phase conductor not connected to the centre contact of the Edison-type screwed lamp holder.

LUXC Metal box for mounting lighting switch not earthed.

OOKB Circuit protective conductors of ring 13-A socket outlet circuits not run in the form of ring.

OSEB Individual circuit protective conductor not provided for every 13-A/15-A socket outlet.

OSEC Socket outlet and/or associated metal box not earthed.

OSPK Wiring at socket outlet connected up with incorrect polarity.

RBXM Shaver supply units not complying with approved pattern.

🎯 *Shaver supply unit complying with IEC 61558-2-5 or equivalent should be used.*

RBXZ Socket outlet in bathroom not complying with installation standard.

🎯 *Socket outlet in bathroom should be installed beyond zone 2 in compliance with Code 26A(3)(j) of CoP.*

RDSF RCD of 30-mA operating current not provided for socket outlet/circuit supplying equipment (in bathroom and within 2.25 m height) with exposed conductive parts.

SWPK Wiring at switch connected up with incorrect polarity.

SWRI Motor not provided with means to prevent unexpected restarting that might cause danger.

c. Rising Mains

BCIF Busbar chamber and riser not provided with phase identification.

CPRB Protective conductor for the rising mains smaller than 70 sq. mm. Cu or equivalent.

CYML Lateral mains undersized when compared to the rating of the protective device.

FCIF Cutout fuse box/switch not provided with phase identification.

NBXF Suitable neutral/earth block not installed for lateral mains at each floor.

RMML Rising mains undersized when compared to the ratings of the protective device.

RMQL Riser live parts not properly enclosed/insulated.

RSBJ Instantaneous trip RCD used as riser switch or cutout of multi-customer premises.

- *RCD with appropriate time delay and operating limits may be used.*
- *Earth fault relay may be used.*

RTXF 3-phase 4-wire lateral mains tee-off from rising mains not provided at each floor.

d. Others

INTE Poor workmanship.

INXE Miscellaneous uncommon defect.

2. Departures from HK Electric Supply Rules

a. Pre-Inspection Check

ADXP	Incorrect service address.
AEZE	Part of the installation not ready for inspection.
AILF	Service address identification label not fixed at meter tails.
CCCS	Cross connection check sheet not provided.
DCXF	Copy of Work Completion Certificate not provided.
DFRM	Separate application for riser installation inspection not provided.
DOXP	Service address not confirmed and/or amended with legal document at Customer Centre.
INAA	Whole installation inaccessible for inspection.
INZB	Load transfer not completed.
INZE	Whole installation not ready for inspection.
PIRE	Supply arrangement to be confirmed.

b. Main Switch

AEFA	Shutdown of supply not arranged for functional check of ACB/RCD/changeover.
AEXP	Catalogue of equipment not provided.
BAFI	Functional check of main incomer not performed.

BMOF Non draw-out type circuit breaker installed when obtaining supply directly from HK Electric transformer.

- *An isolator in conjunction with a fixed type circuit breaker may be used, provided that it is mechanically interlocked with the circuit breaker.*
- *Fused switch may be used.*
- *Plug-in type MCCB may be used.*

BTLE The busbar between transit block and main switch exceed 10 metres.

DASF Label not provided on multi-setting main switch to indicate the rated setting.

DOEP Information not provided to prove grading of protection system with HK Electric system.

- *Typical protection scheme for L.V. main switch directly fed by HK Electric transformer should refer to Clause 4.6.*

DORP Confirmation document for load limitation and transference of all existing wirings to the new HK Electric service cutout not provided by registered customer.

DWXF As fitted wiring diagram showing the main distribution system not provided in the main switchroom.

GNXF Interlock scheme for standby generator not installed.

- *Electrically and mechanically interlocked 4-pole changeover devices should be used for interconnection between the normal and standby sources.*

HELE The cables between HK Electric service cutout and main switch exceed 3 metres.

HERF Building main switch directly above HK Electric service cutout not installed.

HETM Cables terminated at HK Electric service cutout exceed two sets.

> *A building main switch should be installed to control all outgoing circuits.*

HXLE The cables between HK Electric transformer and main switch exceed 20 metres.

ILXD Interlock scheme for interconnection of two or more supply sources not function properly.

ILXF Interlock scheme for interconnection of two or more supply sources not installed.

> *Electrically and mechanically interlocked 4-pole type should be used for all incoming and interconnection circuit breakers.*

INFA Supply not available to complete the inspection.

ITVA Shutdown of supply not arranged for insulation resistance check.

LMXB The G/F lateral mains not connected directly to HK Electric service cutout.

MBXF Main switch not installed immediately before HK Electric meter.

MEZP Document for disconnection of temporary meter not provided.

MWRL Incorrect size for meter wires for whole current (direct connected) type meter.

> *Sizing of meter wires should refer to Drg. No. GCS/5/14.*

MWTK Main wires not properly terminated at HK Electric service cutout.

> *Termination requirements should refer to Drg. Nos. GCS/3/05 and GCS/3/07.*

MWXF	Main wires not connected to HK Electric supply source.
RMLH	C.I. form 140 (confirmation of agreement from owner of rising mains for connection of electrical installation with an increased current demand) not provided.
SCFI	Functional test of changeover device not performed.
SFXF	4-pole switch not used to interconnect standby generator and normal supply source/two or more sources of supply.
SMLA	Load limitation device not provided.
SMSP	Information not provided to prove breaking capacity of main switch.
SMXF	Length of main cable between main switch and whole current (direct connected) type metering point exceeds 3 metres.
SMXP	Main switch rating different from the rating on application form.
SOOE	The switchroom/meter room used as a store.

c. Meter Position

BOWF	Outdoor weatherproof cubicle to accommodate tariff meter not provided.
CBIE	Busbar inside C.T. chamber without phase identification.
CBXL	Busbar inside C.T. chamber not insulated.
CEXF	Voltage wires for C.T. operated meter not provided/not connected at the load side.
CEXJ	Circular copper strand conductor not used for termination into the direct-connected type meter.
DAXF	Tidy, permanent and securely fixed address label not provided for meter board/main switch/meter cubicle.

DOMP	C.I. form 135 (confirmation of no double metering) not provided/Shutdown of supply not arranged for double metering check.
MBBE	Loose meter board not securely fixed.
MBCF	Working clearance in front of meter less than 900 mm.
MBHE	Meter board position above 2.25 m.
MBLE	Meter board position below 0.9 m for meter room or 2.15 m for public area.
MBXA	Meter position located inside customer's premises.
MBXE	Size of meter board not comply with HK Electric requirement.
MCDJ	Meter cubicle defective.
MEXF	Metering equipment not installed.
MFCE	Side clearance for fuse holders inside C.T. chamber less than 50 mm.
MFXF	Fuse holders & link inside C.T. chamber not installed in accordance with HK Electric requirement. 🎯 *Requirement of fuse holders & link inside C.T. chamber should refer to Drg. No. GCS/5/19.*
MGXR	Metering point not close to supply source.
MHCF	Working clearance in front of C.T. chamber/C.T. cum link box less than 900 mm.
MHEC	Metallic part inside C.T. cum link box not earthed.
MHGD	Cable gland not installed at C.T. chamber.
MHHE	C.T. chamber position above 2.6 m.
MHLE	C.T. chamber position below 0.9 m for meter room or 2.15 m for public area.

MHXE C.T. chamber not comply with HK Electric requirement.

🎯 *C.T. chamber requirement should refer to Clause 5.8. and Drg. No. GCS/5/19.*

MHXF C.T. chamber and metering wiring not installed.

MIXM Check meter installed.

MJXF Meter wirings for whole current (direct connected) meter not installed.

MLDM Unrequired perishable meter leads not removed.

MMAA Metering multi-core cable not surface mounted and properly fixed.

MSXE Proper sealable screw not provided at C.T. chamber.

MTCR C.T. inside C.T. chamber not installed with correct ratio.

MTPE C.T. inside C.T. chamber not installed with correct polarity.

🎯 *Requirement of C.T. inside C.T. chamber should refer to Drg. No. GCS/5/21.*

MTXK C.T. inside C.T. chamber not securely fixed by bakelite.

MWCE Meter termination clearance not comply with HK Electric requirement.

🎯 *Meter termination clearance should refer to Drg. No. GCS/5/14.*

MWIS Meter leads and meter tails without permanent phase identification.

MWLF Meter leads and meter tails not long enough for meter fixing.

🎯 *Length of meter leads and meter tails should refer to Drg. No. GCS/5/14.*

MWXG Two sets of main wires not combined into one set.

OPXI Openings in C.T. chamber not well covered.

UEXM Unauthorized extension not removed.

d. Final Circuits

AMRE Motor of 3.8 kW or greater (overhead line supply)/ 11 kW or greater (non overhead line supply) without suitable starter to limit the starting current to 2.5 times the running current.

AMRJ Single-phase motor greater than 1.5 kW (overhead line supply)/2.2 kW (non overhead line supply).

CPXF Capacitors for discharge lamps to improve power factor not installed.

e. Rising Mains

FCZA Fuse link not installed in cutout.

KMXF Master key for meter duct/room not provided.

LUXF Lighting point for meter room not provided.

RMSF Local riser switch for multi-customer rising mains at each tower not installed.

f. Others

INXS Miscellaneous uncommon departures.

CHAPTER 9

HOW TO ENHANCE THE RELIABILITY & POWER QUALITY OF ELECTRICITY SUPPLY

CHAPTER 9

HOW TO ENHANCE THE RELIABILITY & POWER QUALITY OF ELECTRICITY SUPPLY

9.1 Introduction

1. HK Electric provides a very reliable power supply to our customers with a pledged reliability of over 99.999%. However, public electricity supply systems are liable to external influences. Despite the fact that we have made every endeavour to ensure high reliability of electricity supply and good power quality, power quality problems may still occasionally occur due to various causes.

   Loading conditions, defect or fault in the equipment/installation of one customer may affect other customers who share the same communal electrical installation and/or the same supply source. In other words, power quality problems may also originate from the customer side.

   Generally, the most common power quality problems a customer may encounter include supply interruption, voltage dip and harmonics.

2. This Chapter depicts the causes of the above problems and various enhancement/mitigation measures a customer may adopt to safeguard his power supplies for important services.

9.2 Supply Interruptions

1. Causes

   a. The most common cause of power interruption is underground cable damage or cable fault arising from disturbances by third parties' excavation work. Customers supplied by the damaged cable will experience supply interruption until backup supply is connected or the cable is repaired.

When a distribution high voltage (HV) supply cable is faulty or damaged, it may result in supply interruptions to customers. The supply interruption is usually very short and is in the order of a few minutes. However, in exceptional circumstances when there are simultaneous multiple cable faults or when there is a transformer or switchgear fault, a longer period of supply interruption may occur.

For low voltage (LV) network fault, supply can only be restored after the fault is repaired or after backup supply is connected by the emergency crew. Thus, the time for supply restoration would be longer.

b. Other than cable fault or damage, power interruptions may also be caused by equipment failures in the supplier's system as well as in the customer's installations.

c. Customer's electrical installations are usually connected in a radial network. Fault in any part of customer's electrical installations will trigger protective devices to isolate the faulty part. Supply interruptions will then occur to the downstream feeders. Common faults of customer's electrical installations that may cause supply interruptions include:

   i. Overload or under-rated equipment,

   ii. Improper connections,

   iii. Deteriorated insulation or faulty switchgear,

   iv. Defective electrical appliances,

   v. Improper setting of protection devices.

2. Possible Enhancement/Mitigation Measures

a. Interconnection Between Different Transformers/11-kV/22-kV Sources on Customer Side

When the customer's installations receive supply from two or more HK Electric transformers/11-kV/22-kV supplies, the customer is strongly recommended to install bus section switch(es) so that a backfeed source is available through the other transformer/ 11-kV/22-kV supply in the event of loss of supply from one of these sources. Typical examples are shown in Drg. Nos. GCS/9/01, GCS/9/02, GCS/9/03 and GCS/9/04.

If bus section switch(es) cannot be installed in the main switchboard due to site constraints, especially for the existing installations, transfer switch(es) should be considered on the load side for the important services downstream. A typical example is shown in Drg. No. GCS/9/05.

b. Uninterruptible Power Supply (UPS), Standby Generator and Other Automatic Backup Supply (ABS) for Important Services

i. Where an electricity supply for important services is required, the customer is recommended to install an UPS system, standby generator and/or other ABS system to prevent and minimize any damage, loss or inconvenience caused directly or indirectly by any expected or unexpected voltage fluctuation, voltage dip, interruption or failure of supply howsoever arising. A typical example is illustrated in Drg. No. GCS/9/06.

ii. For services that can tolerate a short time delay in power resumption after a power failure, a standby generator or alternative supply with automatic changeover device is a possible solution.

iii. For services where a continuous electricity supply is required, an UPS system (which may only maintain power supply for a limited period of time in case of normal supply failure) together with an ABS system is more advisable to prevent and minimize any damage, loss or inconvenience caused directly or indirectly by any expected or unexpected voltage fluctuation, voltage dip, interruption or failure of supply.

iv. As a general guideline, if the customer has any of the following equipment, he is strongly recommended to install an UPS system, standby generator and/or other ABS system in order to ensure that the equipment continues to operate properly when there is any voltage fluctuation, voltage dip, interruption or failure of supply:

- medical equipment which is supporting or treating patients;

- computer equipment, control equipment and any other equipment which requires continuous regulated supply;

- equipment used for ensuring and maintaining safe access to, exit from and environment for any activities inside a tunnel or confined space;

- equipment used in conditions of emergency such as rescue operations and combating with fire, flood, dangerous fumes/gas and other hazards;

- equipment used for security surveillance and other similar purpose;

- appliances/equipment which require critical supply of electricity to maintain proper operation and/or which would incur substantial loss and damage if there is any voltage fluctuation, voltage dip, interruption or failure of supply;

- appliances/equipment which the survival of live stock will rely on.

v. The customer shall consult an expert or a consultant on which type and capacity of UPS system, standby generator and/or ABS system he shall use. The customer is also advised to consult the supplier or manufacturer of his particular equipment/appliance on the requirements of the UPS system, standby generator and/or ABS system.

c. To Review Regularly the Capacity of UPS system, Standby Generator and Other ABS system for Important Services

As the demand may increase over time, the customer is advised to review the essential loading regularly and to ensure that the capacities of UPS system, standby generator and/or ABS system are adequate to meet the current demands of all essential services.

d. Inspection and Maintenance of Customer's Installations

Regular inspection and preventive maintenance of customer's installations should be carried out to improve the reliability of the electrical installations. The frequency of inspection and maintenance should be strengthened for installations supplying important services.

e. Selectivity of Protective Devices

Improper settings of protective devices will result in unnecessary interruption of supply and/or damage to electrical equipment. In the event of a fault, protective devices should operate to isolate the supply of the faulty part promptly. However, protective devices should be discriminated and so arranged that only the minimum necessary portion of the electrical installations would be isolated. The customer is recommended to regularly check and review the protection settings in his installations.

A typical example on grading arrangement of protective devices is shown in Drg No. GCS/9/07.

9.3 Momentary Voltage Dips

1. Causes

   a. Momentary voltage dip is defined as a sudden voltage reduction to a value between 90% and 1% of the declared voltage. The actual magnitude and duration of the momentary voltage dip may vary according to the type of fault and/or other factors. The duration of the voltage dip caused by a HV fault is usually very short, typically less than 1 second. However, this momentary voltage dip can cause nuisance tripping of the customer's air-conditioning (A/C) system, electrical motor system or other services.

   b. When a fault occurs on a supply cable or equipment, voltage dip may be experienced on all parts of the power supply system affected by the fault until the protective devices operate to clear the fault. Thus, apart from the supply interruption to those customers who are directly supplied by the faulty cable or equipment, other customers may also experience voltage dip. In the case of a distribution equipment/cable fault, the voltage dip is localized to the geographical area where the equipment/cable connected but for a transmission equipment/cable fault, the voltage dip will be geographically more extensive.

   c. Since our supply network is interconnected with CLP Power, which in turn is interconnected with mainland China, customers supplied by HK Electric may experience momentary voltage dips as a result of faults in the transmission power systems other than HK Electric system.

   d. Voltage dips can also be caused by customer’s installations, such as excessive starting current of large motors or fault current before the protective devices isolate the fault.

2. Possible Enhancement/Mitigation Measures

a. Motor Circuit Design Consideration

i. Starting of large motor usually draws an excessive current and may result in voltage dip. A customer should therefore specify his motors in such a way that starting of the motors shall not interfere with the sensitive equipment in the installation. In addition, the starting current shall comply with the requirements as stipulated in HK Electric Supply Rules.

ii. Voltage dip may cause an increase of motor current and tripping of the control circuit. To minimize inconvenience, plants and machines should be specified to be capable of continuously running and withstanding the momentary voltage dip without damaging effects. If there are two or more supply sources, the customer may also separate the supply sources to motors from those to the sensitive equipment.

iii. The equipment suppliers shall be consulted with regard to the capability of the machines to withstand the thermal and mechanical stress during and after the voltage dip. If it is confirmed that the machines have the design capability to run continuously and withstand the momentary voltage dip without damaging effects, a suitable short time delay may be introduced in the control circuits, and the voltage protection setting may be adjusted to prevent nuisance tripping.

b. Air-Conditioning Systems

Chiller plants and their associated equipment of the air-conditioning system are susceptible to voltage dips. A customer should therefore consider specifying his air-conditioning system to allow the chiller to ride-through voltage dips or to incorporate automatic re-start functions such that the impact to air-conditioning services will be minimized. These can be achieved by installing voltage dip ride-through devices for control devices and modifying the building management system software as appropriate.

c. Escalators and Lifts

i. Escalators will require manual reset when they are tripped during voltage dips. The ride-through capability of escalators can be improved by adding appropriate mitigation devices. For adding mitigation devices against voltage dips, please also refer to the latest Code of Practice on the Design and Construction of Lifts and Escalators.

ii. Lifts may be tripped during voltage dips. To minimize inconvenience, lifts should be designed with an automatic rescue device or a post-voltage-dip-operation means to send the car to a landing and open the car and landing doors to release the passenger, or resume the normal operation of the lift, when the normal power supply is stabilized. The automatic rescue device or a post-voltage-dip-operation means shall not cause the lift to be restarted, if further lift operation will lead to a dangerous situation.

d. High Pressure Discharge Lamp (HPDL)

HPDL is sensitive to voltage dips and cannot be re-ignited in a short time even when the supply has resumed to normal. This may cause interruption to important events. There are several suggestions to resolve this problem:

i. Use a constant Wattage Auto-Transformer with higher voltage dip ride-through capability.

ii. Employ lamps with double tube feature, whose side tube can be ignited when the main tube extinguishes.

iii. Employ a hot re-strike igniter to produce a higher re-strike voltage after voltage dips while the lamp is still hot.

iv. For critical lighting applications, install non-HPDL such as fluorescent or Lighting Emitting Diode lamps, or emergency HPDL lighting with UPS.

e. The Proper Use of Undervoltage Protective Devices

i. Undervoltage protective devices should not be installed at main switches or switches affecting supply to more than one customer and/or equipment.

ii. Whenever undervoltage protective devices are to be used, they should be installed on the load side in order to avoid unnecessary tripping to other equipment.

iii. As a preventive measure against nuisance tripping in the event of momentary voltage dip, a time delay device with suitable setting, such as 1 second should be incorporated provided that the equipment is capable of withstanding the thermal and mechanical stress during and after the voltage dip.

f. Power Conditioning Devices

i. UPS is an effective means to protect important services from momentary voltage dips. UPS contains energy storage components, which can also maintain voltage level instantly for a predetermined period of time in case of voltage dips/supply voltage fluctuations/interruptions. Please also refer to Clauses 9.2.2.b and 9.2.2.c for details.

ii. A typical voltage stabilizer will maintain the output voltage to within 2% of the normal value even when the mains supply voltage varies by up to 20%. The device will also prevent voltage spikes and other transient voltages from entering into the important services. However, voltage stabilizer does not compensate for complete interruption of main electricity supply and/or severe voltage dip.

iii. A line conditioner contains isolation and filter circuits, which will prevent voltage transients and voltage spikes from entering into the important services. Similar to voltage stabilizers, it cannot provide complete compensation.

iv. The customer shall consult an expert or a consultant on which type and rating of power conditioning devices he shall use. The customer is also advised to consult the supplier or manufacturer of his particular equipment/appliance on the requirements of the power conditioning devices.

9.4 Harmonics

1. Causes

Harmonic voltage is defined as a sinusoidal voltage having a frequency equal to an integer multiple of the fundamental frequency (i.e. 50 Hz) of the supply voltage. Harmonics are generated by any load that draws current not proportional to the voltage applied. In other words, harmonics are generated by non-linear loads that draw non-sinusoidal current. Harmonic currents flowing through the impedances of the electrical system give rise to harmonic voltages. Harmonic currents and thus the harmonic voltages vary over time. Such non-linear loads include but are not limited to fluorescent lamps, electronic machines (copiers and fax), power electronic devices in the control circuits of motors and battery chargers. The possible impacts caused by harmonics are listed below for information:

a. Overheating of motors/transformers,

b. Overheating of capacitors,

c. De-rating of electrical wiring and devices,

d. Decreased motor performance,

e. Improper operation of protection devices like breakers, relays or fuses,

f. Telecommunications interference,

g. Improper operation of sensitive electronic devices like motor control circuits.

2. Possible Enhancement/Mitigation Measures

a. Handling Non-linear Loads

i. It is always more economical to tackle the problems in design stage rather than to carry out remedial actions afterwards. It is advisable that a customer should specify to his equipment suppliers that the equipment of non-linear load must comply with relevant international standards for the harmonics performance. HK Electric Supply Rules have also specified the harmonic current and harmonic voltage distortion levels at HK Electric supply point, which must be complied with to prevent/minimize interferences with other customers. Although it may involve a higher initial cost, it is normally a more cost effective investment since the cost of any subsequent remedial work may be more expensive, not to mention the possible inconvenience to business that can arise from harmonic interferences.

ii. For existing equipment with extensive harmonics generation, such equipment should be electrically isolated from essential equipment. It can be done by connecting essential equipment to dedicated 'clean' circuit, electrically away from non-linear load.

b. Harmonic Filters

i. A customer may use passive or active harmonic filters to filter out the harmonics. A passive harmonic filter is capable of minimizing several fixed orders of harmonics on specified load conditions while an active harmonic filter is more sophisticated and can have a more complete bandwidth of dynamic harmonics minimization capability.

ii. Customers are recommended to consult the expert or consultant on which type and rating of harmonic filters they shall use. Customers are also suggested to seek advice from the supplier or manufacturer on the requirements of the harmonic filters for their particular equipment/appliances.

9.5 Power Quality Centre

A guided tour to our Power Quality Centre at Electric Centre, 28 City Garden Road, North Point can be arranged on request to introduce various enhancement/mitigation measures which customers may adopt to safeguard their power supplies for important services. Technical advisory services and relevant leaflets on power quality are also available. Customers are welcome to call our engineers at 2887 3455 for further information.

9.6 Schedule of Drawings – How to Enhance the Reliability & Power Quality of Electricity Supply

Drawing No.	Drawing Title
GCS/9/01	Typical Arrangement for Customer's LV Interconnection for a 2–Transformer Substation
GCS/9/02	Typical Arrangement for Customer's LV Interconnection for a 3–Transformer Substation
GCS/9/03	Typical Arrangement for Customer's LV Interconnection for a 4–Transformer Substation
GCS/9/04	Typical Arrangement for Customer's 11-kV/22-kV Interconnection
GCS/9/05	Typical Arrangement for Interconnection Between Transformers at Load Side
GCS/9/06	Typical Arrangement for UPS plus Standby Generator for Important Services
GCS/9/07	Typical Example on Grading Arrangement of Protective Devices at Customer's Installation

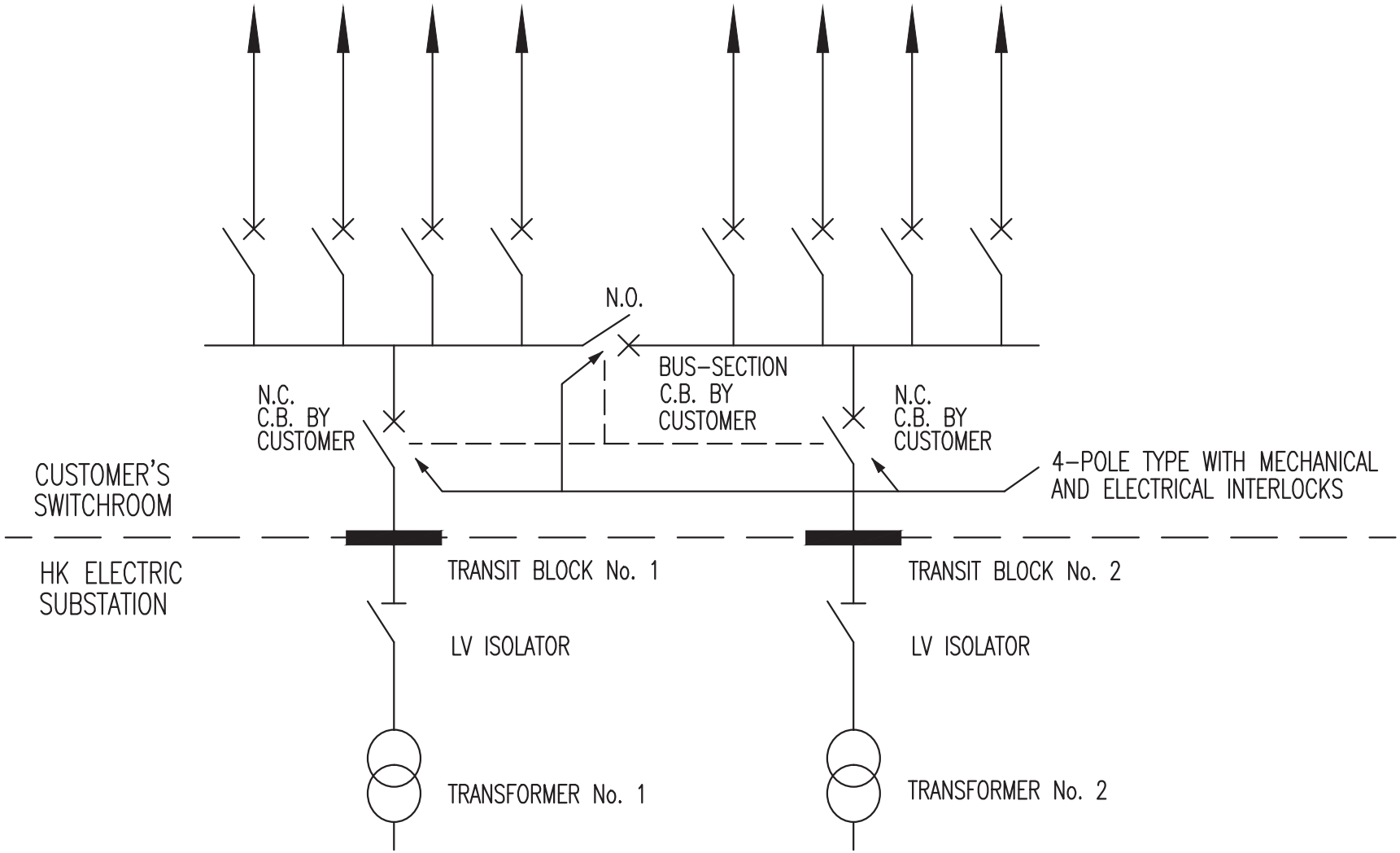

Drg. No. GCS/9/01

TYPICAL ARRANGEMENT FOR CUSTOMER'S LV INTERCONNECTION FOR A 2-TRANSFORMER SUBSTATION

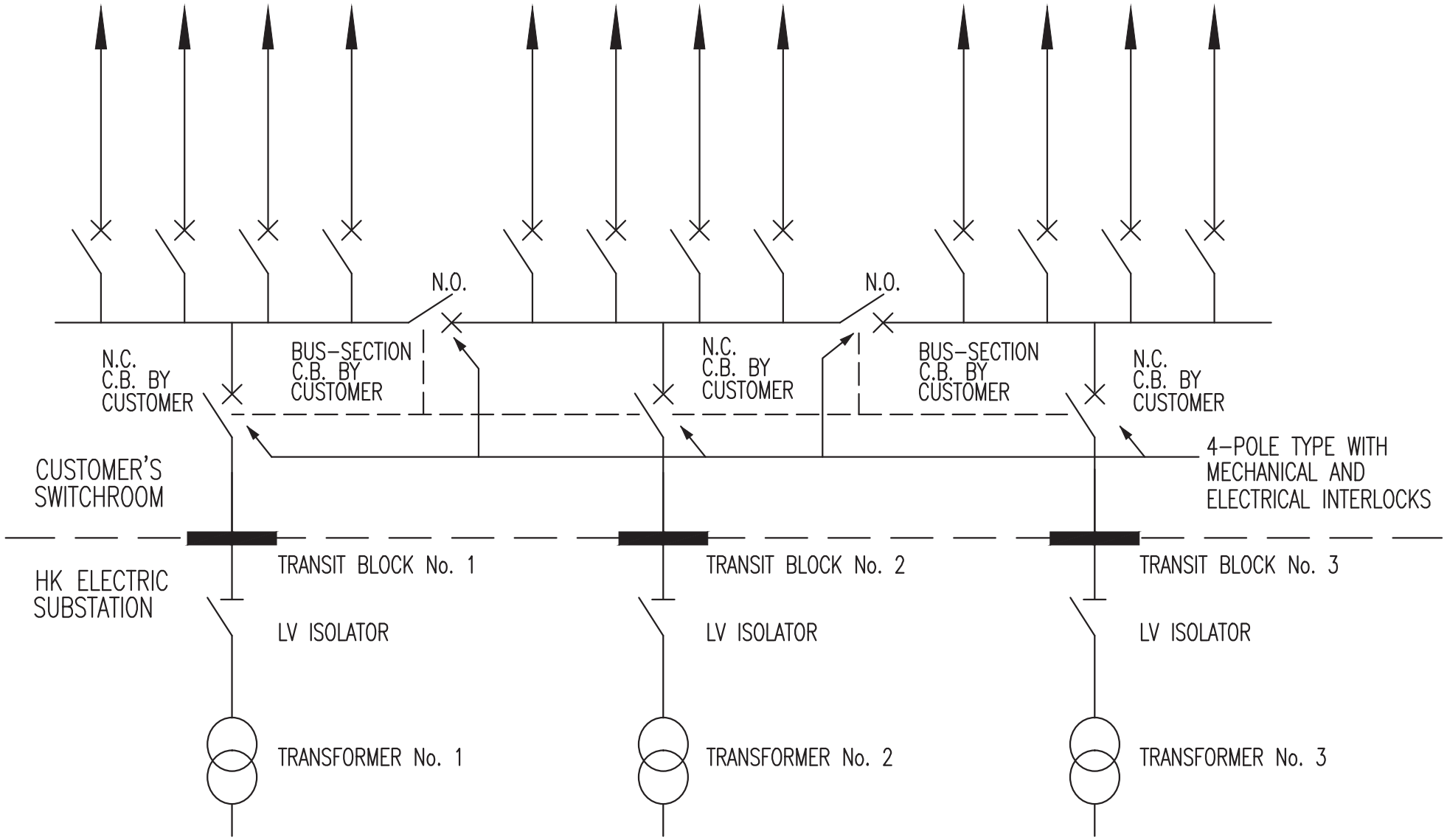

Drg. No. GCS/9/02

TYPICAL ARRANGEMENT FOR CUSTOMER'S LV INTERCONNECTION FOR A 3-TRANSFORMER SUBSTATION

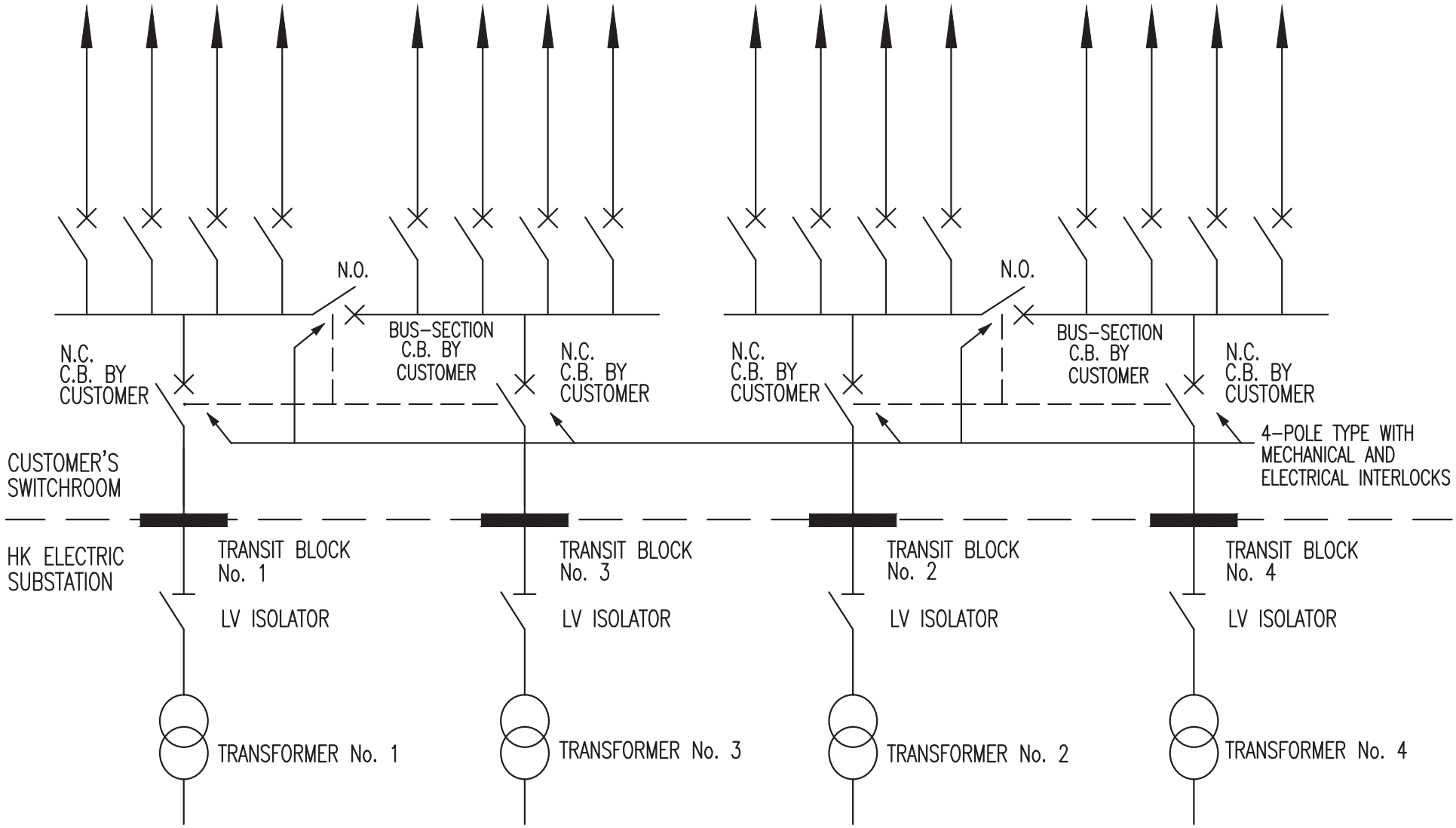

Drg. No. GCS/9/03

TYPICAL ARRANGEMENT FOR CUSTOMER'S LV INTERCONNECTION FOR A 4-TRANSFORMER SUBSTATION

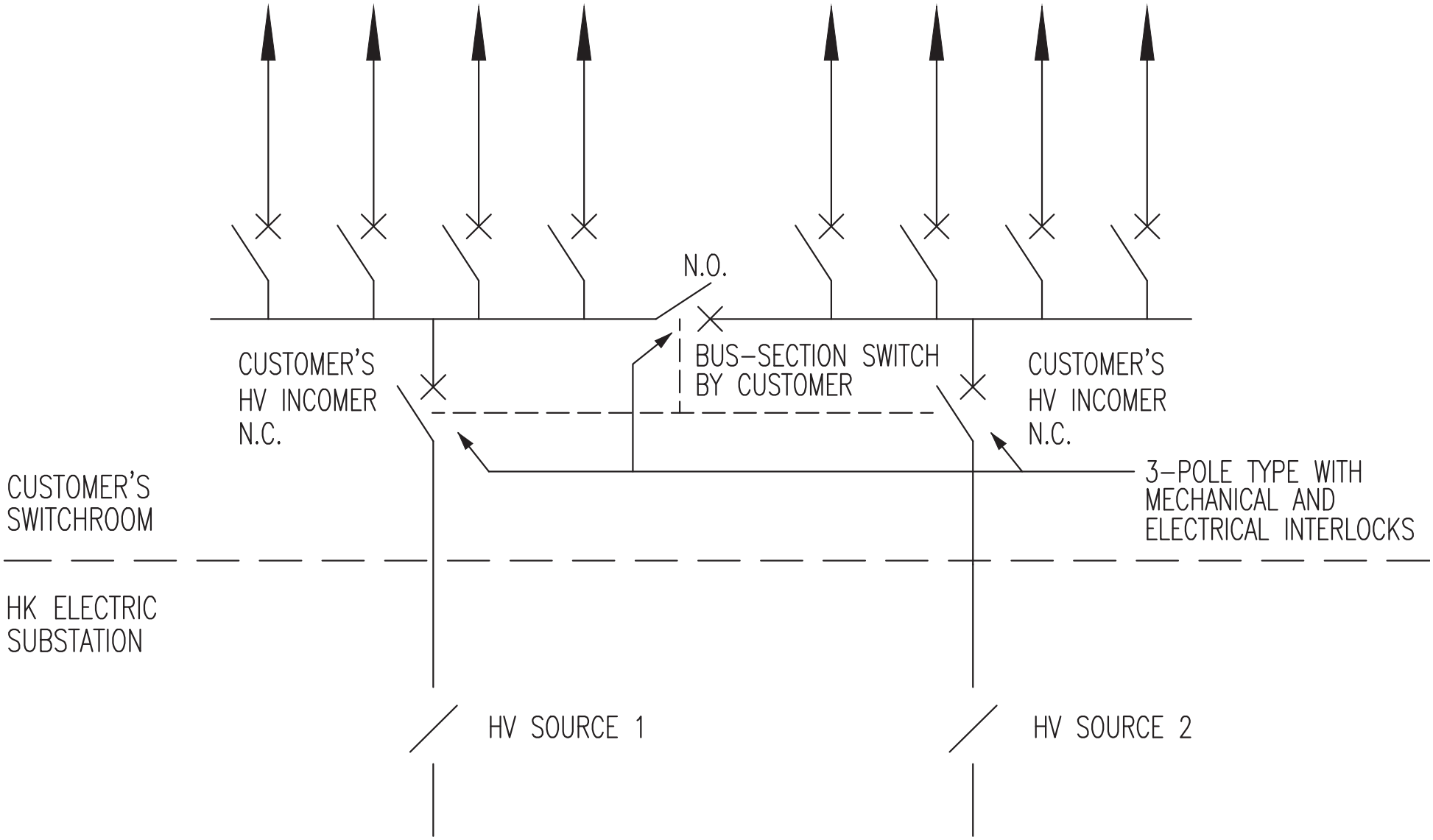

Drg. No. GCS/9/04

TYPICAL ARRANGEMENT FOR CUSTOMER'S 11-kV/22-kV INTERCONNECTION

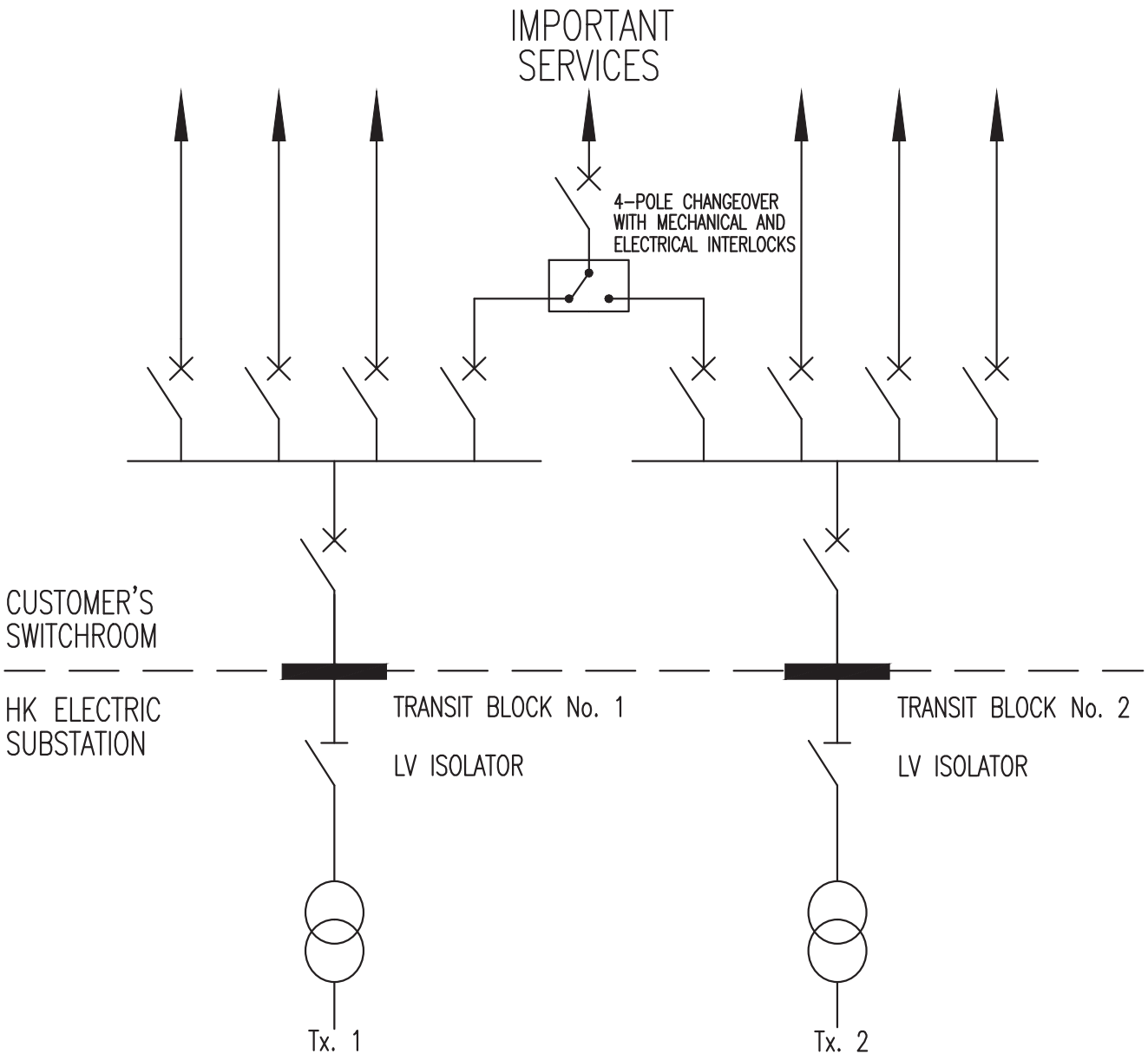

Drg. No. GCS/9/05

TYPICAL ARRANGEMENT FOR INTERCONNECTION BETWEEN TRANSFORMERS AT LOAD SIDE

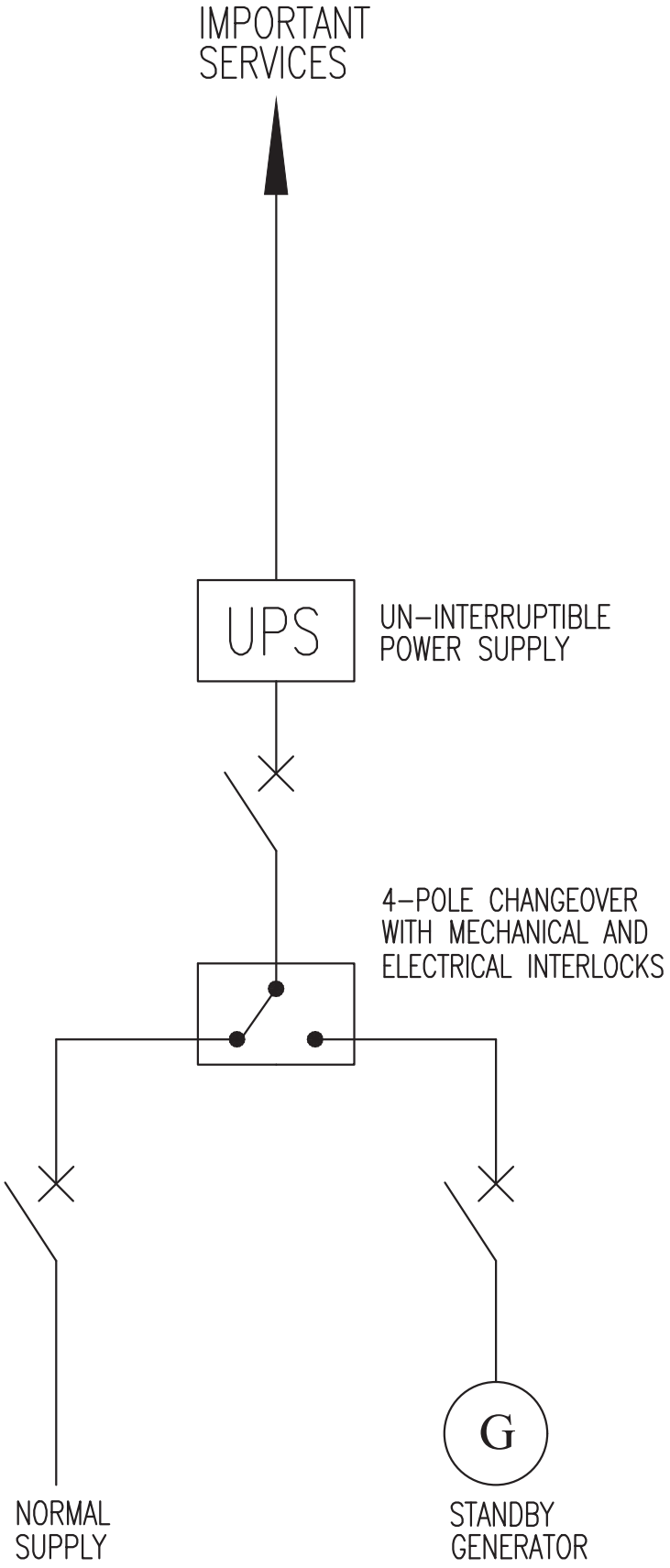

Drg. No. GCS/9/06

TYPICAL ARRANGEMENT FOR UPS PLUS STANDBY GENERATOR FOR IMPORTANT SERVICES

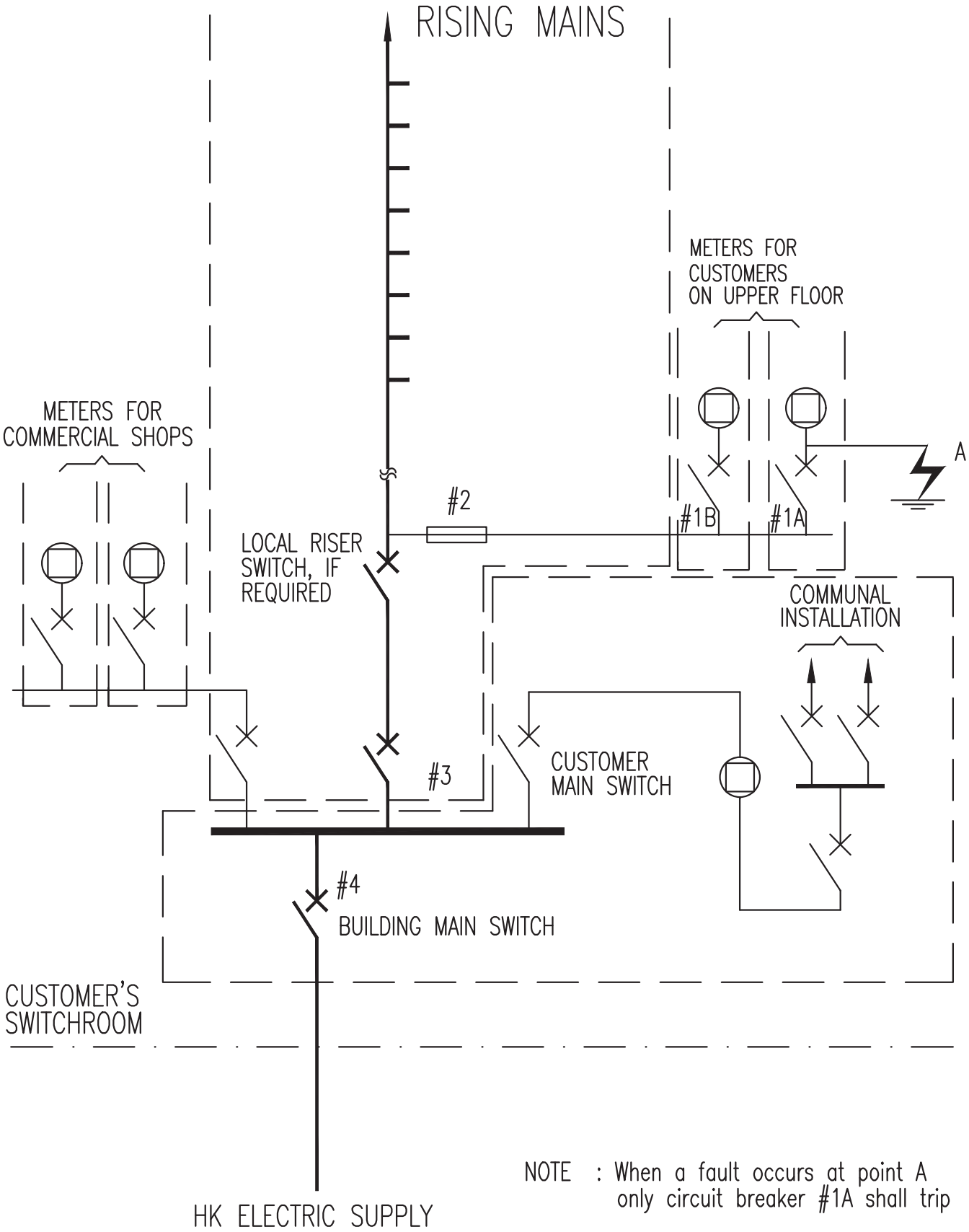

Drg. No. GCS/9/07

TYPICAL EXAMPLE ON GRADING ARRANGEMENT OF PROTECTIVE DEVICES AT CUSTOMER'S INSTALLATION

CHAPTER 10

CUSTOMER SERVICES

CHAPTER 10

CUSTOMER SERVICES

10.1 The Customer Centre

The Centre is located on 9/F., Electric Centre, 28 City Garden Road, North Point, Hong Kong (Near Fortress Hill MTR Station). It provides general services on customers' accounts and technical advisory services to customers and registered electrical contractors/workers.

1. The general services on customers' accounts and enquiries provided in the Customer Centre include:

    a. Application for supply/change of load.

    b. Application for transfer of account.

    c. Application for termination of account.

    d. Deposit enquiries and refund.

    e. Bill enquiries.

    f. Copy bills.

    g. Consumption queries.

    h. Autopay application.

    i. Request for special meter reading.

    j. Historical consumption record.

    k. Miscellaneous enquiries.

2. The technical advisory services provided in the Customer Centre include:

    a. Advising customers and RECs/REWs on HK Electric requirements and the requirements of the interface between the customer's and HK Electric equipment for connection of supply.

b. Making appointment for inspection or re-inspection.

c. Amendment of inspection date.

d. Issue of inspection reports.

e. Explanation of the inspection report to the customer and REC/REW.

f. Issue of tariff metering equipment.

g. Handling the standard forms related to inspection.

h. Handling request for shutdown of HK Electric supply.

10.2 Telephone Enquiry Services

1. A customer or a REC/REW can make enquiries in regard to his account and electricity supply through the customer services hotline 2887 3411 for general customer services and 2887 3455 for technical advisory services.

2. The customer services hotline 2887 3411 provides the following services:

   a. Bill enquiries.

   b. Application for supply and account transfer.

   c. Application for termination of account.

   d. Deposit enquiries and refund.

   e. Consumption queries.

   f. Request for special meter reading.

   g. Copy bills.

   h. Autopay application.

   i. Historical consumption record.

   j. Miscellaneous enquiries.

3. The customer services hotline 2887 3455 provides the following services:

   a. Appointment for inspection or re-inspection.

   b. Amendment of inspection date.

   c. Enquiry of inspection time band for next working day.

   d. Explanation of the inspection report to the customer and REC/REW.

   e. Confirmation of temporary shutdown of supply.

10.3 Account-by-Phone Service

We provide an automated telephone system, the Account-by-Phone Service (APS), to make it more convenient for our customers to obtain information and services regarding their electricity accounts 24 hours a day.

By calling 2887 3466, the customer or REC/REW will be guided to obtain the desired information and services by pressing the buttons.

10.4 Electricity-by-Phone Service

We provide an automated telephone system, the Electricity-by-Phone Service (EPS), to make it more convenient for customers or RECs/REWs to obtain information and services regarding the connection of supply, customer requested shutdown and other advisory services 24 hours a day.

By calling 2887 3838, the customer or REC/REW will be guided to obtain the desired information and services by pressing the buttons.

The following information and services are provided:

1. Time band of inspection appointment.

2. Result of last inspection.

3. Fax copy of report of last inspection.

4. On-line booking of inspection appointment.

5. Progress of application for supply.

6. Customer requested shutdown.

7. Request for standard forms related to inspection.

8. Advisory services on voltage fluctuations.

9. Useful telephone numbers.

10.5 Electronic Services

We also provide electronic services for customers to obtain information and services regarding connection of supply and electricity account matters. Customers can obtain these services from our website www.hkelectric.com or our mobile app. Services available include:

1. Access to electricity bill and account information.

2. Subscribe e-Receipt.

3. Payment through Internet.

4. On-line electricity account applications, such as application for supply/transfer and appointment for installation inspection, etc.

5. Download brochures and standard forms concerning application for supply/transfer and customer installation inspection, etc.

10.6 Inspection Service

1. Appointment for Inspection or Re-Inspection Date

   a. We normally provide appointment for installation inspection within 2 working days. However, exception may be entertained provided that

      i. the customer can provide documentary evidence to prove the urgency, and

      ii. inspection manpower is available.

   b. If a customer wishes to make an inspection appointment or to alter an inspection date, he may make the request by completing Form C.I. 121, from our website www.hkelectric.com or by calling 2887 3455.

c. A 1.5-hour inspection time band will be assigned to each inspection appointment. Our staff will visit the service address at anytime within the 1.5-hour inspection time band. The appointment time for inspection will be normally from 0930 to 1730 hours.

d. Customer/REC/REW may call us at 2887 3455 or via the 24-hour EPS system at 2887 3838 to enquire the 1.5-hour inspection time band appointment for the next working day.

e. Customer/REC/REW may request to have a fax or SMS notification of confirmation of the inspection appointment time band. They can also opt for SMS e-alert notification of inspection results and confirmation of their electricity supply connection.

f. Customer/REC/REW may make re-inspection appointment before settling the re-inspection fee, if any.

2. Inspection Report

If the installation is found to be substantially incomplete or defective, a report will be issued to the customer/REC/REW on site immediately after the inspection. A copy of the report and a notification letter will be sent to the correspondence address TWO working days after every inspection. Additionally, the customer/REC/REW may obtain a copy of the report via the 24-hour EPS system at 2887 3838.

3. Inspection Service Outside Normal Office Hours

Under normal circumstances, inspection service is rendered during office hours. However, should there be a genuine need, HK Electric may consider to provide the service outside normal office hours. To apply for the service outside normal office hours, the following conditions shall be noted:

a. The customer shall complete a form (C.I. 137) "Request for Advance Installation Inspection" and shall undertake to pay the service charge as required. The service charge will be added to the customer’s monthly electricity bill. Alternatively, REC/REW may apply for payment of service charge on behalf of the customer by completing Form C.I. 142.

b. The request shall be made to HK Electric as soon as possible so that HK Electric can make necessary arrangement.

10.7 Collection of Tariff Metering Equipment

Ordinary tariff metering equipment is provided free of charge to our customers. For whole current type meters (direct-connected type meters), our meter fixer will bring the meters to site and install them. For C.T. operated meters, REC/REW shall make advance appointment with us at 2887 3455 to collect the necessary metering equipment from the Customer Centre and install them properly before meter fixing.

10.8 Request for Shutdown of HK Electric Supply

1. If shutdown of HK Electric supply is required to facilitate the work, say switchboard maintenance, load transfer etc., first of all, the customer/ REC/REW should obtain a written agreement of the shutdown from all tenants affected. The customer/REC/REW should complete a form (C.I. 509) "Request for Temporary Shutdown of Supply" and return to 9/F., Electric Centre, North Point or by Fax No. 2814 3275 AS SOON AS POSSIBLE and AT LEAST TWO WEEKS before the shutdown date. Fax copy of the shutdown request form (C.I. 509) can be obtained from our 24-hour Electricity-by-Phone Service (EPS) at 2887 3838 or downloaded from our website www.hkelectric.com.

2. The customer or REC/REW should quote the supply number (SN) of his installation for communication with HK Electric. The SN should be checked at the position below and quoted on the above request form.

HK Electric supply arrangement	Position of SN label:
Service Cutout/Cable	L2 module of cutout or ferrule fixed on cable
Transformer	Upper front panel of customer’s main incomer
HV Supply	Upper front panel of customer’s main incomer

3. If changes are to be made to the metering arrangements or the installation during shutdown maintenance, the customer shall inform HK Electric before the shutdown.

4. If there are no changes in metering arrangements or alteration to the installation during shutdown maintenance, the customer shall make a declaration to that effect to HK Electric before restoration of supply.

5. The shutdown period may have to be re-scheduled if circumstances require. The customer or REC/REW is requested to call us at 2814 3421 or our Electricity-by-Phone Service (EPS) at 2887 3838 for arrangement.

6. Pursuant to Regulations 19 and 20 of the Electricity (Wiring) Regulations, a Certificate shall be prepared and signed by a REW of appropriate grade certifying that the installation complies with the Electricity Ordinance. Prior to restoration of supply, the REW shall be present at site and a copy of the duly completed Certificate prescribed by the Government shall be provided to HK Electric as stipulated in our Supply Rules.

10.9 Advisory Service on Voltage Fluctuations

If a customer suspects that his installation has voltage fluctuations, such as light flickering, he shall employ a REC/REW to inspect his electrical installation.

Upon inspection, if the REC/REW finds that the electrical installation is in order but the problem remains unresolved, the customer may write to HK Electric together with a copy of REC's report and state the nature of the problem. HK Electric may visit the customer's installation to investigate the matter. Technical advice will be given to the customer after investigation.

10.10 Advisory Service on Electromagnetic Interference

If a customer experiences electromagnetic interference, he may call us at 2887 3455. HK Electric may visit the customer's installation to investigate the matter. Technical advice will be given to the customer after investigation.

10.11 Load Factor and Power Factor Improvement

If a customer finds the power factor and/or load factor at his electrical installation is not efficient, he may call us at 2887 3455 to request assistance in measuring the load factor and/or power factor.

10.12 Mock Up Inspection Service

In order to assist the customer or REC/REW to identify departures in a typical installation in a multi-flat development at an earlier stage, a free mock up inspection service is provided. The customer or REC/REW may call us at 2887 3455 to request a mock up inspection at least 4 weeks before all flats are ready for inspection.

Upon inspection, an inspection report will be provided to the customer or REC/REW so that rectification work can be arranged.

10.13 Advisory Service on Rewiring of Rising/Lateral Mains of Existing Buildings

A customer who wishes to upgrade his electrical installation in existing building to meet his new demand for electricity may contact HK Electric for advice. We are prepared to provide the following services to facilitate his REW's work:

1. Advice on interface installation requirements.

2. Coordination of upgrading work and shutdown of HK Electric electricity supply.

3. Comment on the proposed schematic wiring diagram.

4. Advice on meter duct/room layout, meter position, etc.

5. Provision of printed address labels with corresponding meter numbers for easy identification of service address at site and cross connection check sheets for verification of correct connection of meter tails after the upgrading work.

6. Coordination of site work so that tariff meters may be properly sealed and checked for cross-connection on time.

A REC/REW may contact us at 2887 3455 for detailed arrangement.

10.14 Ambassador Service

If a customer has any problems with electricity supply related matters, he may call our Enquiry Office at 2887 3455 for advice. The customer may wish to organise seminars or gatherings on electricity matters and we are pleased to send our engineers to speak on topics of interest. For enquiry, please call us at 2887 3455.

10.15 Account Monitoring Service

Before a customer decides to apply for conversion from Non-Residential Tariff to the Maximum Demand Tariff, he should conduct maximum demand measurement/monitoring of his installation to ascertain the advantages and disadvantages of the Maximum Demand Tariff. As an alternative, if he has difficulty to carry out the above assessment, he may consider our Account Monitoring Service at a charge. Under our Account Monitoring Service, we will arrange to provide the following information monthly for customer's account(s) for a period of three months:

1. Maximum Demand (kVA)

2. Consumption (kWh)

3. Charge at Maximum Demand Tariff

4. Charge at Non-Residential Tariff

The concerned account(s) will remain to be charged under Non-Residential Tariff until customer's decision to change from Non-Residential Tariff to Maximum Demand Tariff has been received and agreed by us.

The customer may make the request for the above service by completing Form C.I. 147.

10.16 Enterprise Advisor Service

A one-stop tailor-made "Enterprise Advisor" service is available at our Customer Centre, providing our commercial customers and their electrical contractors with advice on application for new or additional supply, energy efficiency and safety, power quality issues and account matters.

10.17 Services for Small and Medium Enterprises (SME)

The vitality and contribution of SMEs are of crucial importance to the economy of Hong Kong. As a caring organization and to facilitate the conduct of business of SMEs in Hong Kong, we provide a comprehensive range of value-added services to them, covering one-stop service to expedite business start-up by SMEs and other electricity and tariff advisory services.

We value every contact with SMEs and strive to design the most appropriate services for them. Therefore, we actively listen to their needs via after-service survey. We also conduct regular seminars and guided tours to our demonstration centres for the SMEs.

Our "Enterprise Advisor Service" provides the SMEs with advice on application for new or additional supply, energy efficiency and safety, power quality and account matters, all under one roof at our Customer Centre in North Point. This one-stop service can help to speed-up the provision of electricity supply to the SMEs for the start-up of their business.

We have launched Energy-efficient Equipment Subsidy Programme, aiming to subsidise non-residential customers including SMEs to retrofit or install energy-efficient equipment.

10.18 Smart Power Gallery

To bring alive the possibilities of energy conservation and renewable energy to the stakeholders, HK Electric establishes the Smart Power Gallery, an interactive learning space. Located in Possession Street, Sheung Wan, the gallery spans five floors. Across the different floors, visitors can uncover the story behind HK Electric, power system, climate change, renewable energy, low-carbon smart city, Smart Power Services, and etc.

For details, please visit www.hkelectric.com/SPG-en or call us at 2510 2701.

APPENDICES

APPENDIX A

STANDARD FORMS

TITLE	FORM NO.
Appointment for Inspection	C.I. 121
Confirmation of No Double Metering	C.I. 135
Undertaking on Temporary Load Limitation and Transfer to New Supply Source	C.I. 136
Request for Advance Installation Inspection	C.I. 137
Confirmation of No Alteration/Addition on Electrical Installation	C.I. 138
Confirmation of Compliance to Relevant Government Ordinances and Regulations (Exempted Installation)	C.I. 139
Confirmation of Agreement from Owner of Rising Mains for Connection of Electrical Installation with an Increased Current Demand	C.I. 140
Approved Loading Enquiry	C.I. 141
Request for Payment of Service Charges on Behalf of the Registered Customer	C.I. 142
Metering Point Not Close to Source of Supply	C.I. 144
Application for Installation of Check Meter(s) for Consumption Monitoring Purpose	C.I. 146
Application for Account Monitoring Service	C.I. 147
Request for Non-Office Hour Metering Work	C.I. 148
Request for Temporary Shutdown of Supply	C.I. 509
Supply Number Details	DP1

致 ： 香港電燈有限公司
(傳真號碼：2510 7721)

To ： The Hongkong Electric Co., Ltd.
(Fax No.：2510 7721)

機密
CONFIDENTIAL

預 約 檢 查
APPOINTMENT FOR INSPECTION

申請書號碼
Application No.： _____

供電地址
Service Address： _____

☐ 預約檢查日期
Appointment of inspection date： _____

☐ 更改檢查日期由 至
Change of inspection date from： _____ to _____

負責人姓名
Name of Responsible Person： _____

聯絡電話
Contact Telephone No.： _____

負責人簽署
Responsible Person Signature ： _____

日期
Date： _____

客戶提供個人資料純屬自願性質。所收集的個人資料將會作本公司營運之用，該等資料亦可透露予第三者機構以幫助本公司運作。如客戶不提供所需資料，本公司可能無法提供有關服務。如欲索取私隱政策聲明、查詢、要求查詢及改正個人資料，請瀏覽本公司網頁:www.hkelectric.com、電郵至 personaldata@hkelectric.com、致電 2887 3411、傳真至 2510 7667 或郵寄城市花園道廿八號電燈中心九樓保障個人資料主任收。

The provision of personal data is voluntary. Personal data collected will be used in matters relating to the operations of the Company or may be disclosed to third party organisations which assist in the Company's operation. Failure to provide the data requested may mean that the Company is unable to supply the relevant services. To request a full copy of the Privacy Policy Statement, for enquiry, for data access and correction, please refer to website: www.hkelectric.com, email us at personaldata@hkelectric.com, call us at 2887 3411, fax to 2510 7667 or write to 9/F Electric Centre, 28 City Garden Road for the attention of our Personal Data Protection Officer.

致 ： 香港電燈有限公司
(傳真號碼：2510 7721)

機密
CONFIDENTIAL

To ： The Hongkong Electric Co., Ltd.
(Fax No.：2510 7721)

證明書
無雙重電表的證明
CONFIRMATION OF NO DOUBLE METERING

申請書號碼 ： _____
Application No.

供電地址 ： _____
Service Address

_____

由於無法暫停電力以供 貴公司進行「無雙重電表」的檢查，本人已安排註冊電業工程人員（註冊編號：_____）檢查供電予上址電力裝置的線路，並證明在現有或新電表位前和後無接駁任何 貴公司的電表。現附上有關線路圖以供參照。

Since shutdown cannot be arranged for HK Electric to check for double metering, we have arranged registered electrical worker (Registration No. _____) to check the circuit and confirm that there is no tariff meter of your Company installed before and after the present or proposed metering point. A copy of relevant schematic wiring diagram is attached for reference.

負責人姓名 ： _____
Name of Authorised Person

電話號碼 ： _____
Telephone No.

管理處／發展商簽名／蓋章 ： _____
Management Office/
Developer's Signature/Chop

日期 ： _____
Date

客戶提供個人資料純屬自願性質。所收集的個人資料將會作本公司營運之用，該等資料亦可透露予第三者機構以幫助本公司運作。如客戶不提供所需資料，本公司可能無法提供有關服務。如欲索取私隱政策聲明、查詢、要求查詢及改正個人資料，請瀏覽本公司網頁:www.hkelectric.com、電郵至 personaldata@hkelectric.com、致電 2887 3411、傳真至 2510 7667 或郵寄城市花園道廿八號電燈中心九樓保障個人資料主任收。

The provision of personal data is voluntary. Personal data collected will be used in matters relating to the operations of the Company or may be disclosed to third party organisations which assist in the Company's operation. Failure to provide the data requested may mean that the Company is unable to supply the relevant services. To request a full copy of the Privacy Policy Statement, for enquiry, for data access and correction, please refer to website: www.hkelectric.com, email us at personaldata@hkelectric.com, call us at 2887 3411, fax to 2510 7667 or write to 9/F Electric Centre, 28 City Garden Road for the attention of our Personal Data Protection Officer.

致 ： 香港電燈有限公司
(傳真號碼：2510 7721)

機密
CONFIDENTIAL

To ： The Hongkong Electric Co., Ltd.
(Fax No.：2510 7721)

保證書
限制臨時負荷及轉駁負荷至新供電點的承擔
UNDERTAKING ON TEMPORARY LOAD LIMITATION AND TRANSFER TO NEW SUPPLY SOURCE

申請書號碼 ：_____
Application No.

供電地址 ：_____
Service Address

_____

本人保證：
We confirm to undertake the following：

一. 在永久供電工程未完成之前，最大負荷不超過 安培。
Before permanent supply is available, limit the load to _____Amperes.

二. 當新供電裝置完成時，負責將有關線路轉駁到新供電電源。
Transfer the relevant wirings to the new supply source when it is commissioned.

負責人姓名 ：_____
Name of Authorised Person

電話號碼 ：_____
Telephone No.

註冊客戶簽名／蓋章 ：_____
Registered Customer's Signature/Chop

日期 ：_____
Date

客戶提供個人資料純屬自願性質。所收集的個人資料將會作本公司營運之用，該等資料亦可透露予第三者機構以幫助本公司運作。如客戶不提供所需資料，本公司可能無法提供有關服務。如欲索取私隱政策聲明、查詢、要求查詢及改正個人資料，請瀏覽本公司網頁:www.hkelectric.com、電郵至 personaldata@hkelectric.com、致電 2887 3411、傳真至 2510 7667 或郵寄城市花園道廿八號電燈中心九樓保障個人資料主任收。

The provision of personal data is voluntary. Personal data collected will be used in matters relating to the operations of the Company or may be disclosed to third party organisations which assist in the Company's operation. Failure to provide the data requested may mean that the Company is unable to supply the relevant services. To request a full copy of the Privacy Policy Statement, for enquiry, for data access and correction, please refer to website: www.hkelectric.com, email us at personaldata@hkelectric.com, call us at 2887 3411, fax to 2510 7667 or write to 9/F Electric Centre, 28 City Garden Road for the attention of our Personal Data Protection Officer.

致 ： 香港電燈有限公司
(傳真號碼：2510 7721)

To ： The Hongkong Electric Co., Ltd.
(Fax No.：2510 7721)

機密
CONFIDENTIAL

申 請 提 前 進 行 裝 置 檢 查
REQUEST FOR ADVANCE INSTALLATION INSPECTION

申請書號碼
Application No. : _____

暫定日期 / 時段**
Tentative Date / :
Time Band** _____

** 須由港燈確認 To be confirmed by HK Electric

供電地址
Service Address : _____

_____

請在適當方格內加上 (✓)號
Please tick box where appropriate (✓)

☐ **非辦公時間內進行裝置檢查**
Non-office hours Inspection

本人明白，港燈在完成上述屋宇的滿意裝置檢查後，方會進行電網接駁。本人要求港燈提前在非辦公時間內進行有關裝置的檢查及在下一個工作天辦公時間完結前為已完成滿意裝置檢查的裝置進行電網接駁。
We understand that HK Electric will connect the installation at the above premises to HK Electric network only after a satisfactory installation inspection. We request HK Electric to carry out advance inspection during non-office hours and connect the installation to network upon satisfactory installation inspection before the close of office of the next working day.

本人願意承擔此項服務的一切費用。
We undertake to pay the charges arising out of this service.

☐ **在港燈完成供電裝置前進行裝置檢查**
Inspection before HK Electric Supply is available

本人明白，是次裝置檢查只屬預檢，在港燈完成供電裝置後，須就上述屋宇裝置進行覆檢。
We understand that this installation inspection is a pre-inspection only. Re-inspection will be required for the installation at the above premises after HK Electric supply is available.

負責人姓名
Name of Responsible Person : _____

聯絡電話
Contact
Telephone No. : _____

負責人簽署 / 公司蓋章
Responsible Person Signature /
Company Chop : _____

日期
Date : _____

客戶提供個人資料純屬自願性質。所收集的個人資料將會作本公司營運之用，該等資料亦可透露予第三者機構以幫助本公司運作。如客戶不提供所需資料，本公司可能無法提供有關服務。如欲索取私隱政策聲明、查詢、要求查詢及改正個人資料，請瀏覽本公司網頁:www.hkelectric.com、電郵至 personaldata@hkelectric.com、致電 2887 3411、傳真至 2510 7667 或郵寄城市花園道廿八號電燈中心九樓保障個人資料主任收。
The provision of personal data is voluntary. Personal data collected will be used in matters relating to the operations of the Company or may be disclosed to third party organisations which assist in the Company's operation. Failure to provide the data requested may mean that the Company is unable to supply the relevant services. To request a full copy of the Privacy Policy Statement, for enquiry, for data access and correction, please refer to website: www.hkelectric.com, email us at personaldata@hkelectric.com, call us at 2887 3411, fax to 2510 7667 or write to 9/F Electric Centre, 28 City Garden Road for the attention of our Personal Data Protection Officer.

致 ： 香港電燈有限公司
(傳真號碼：2510 7721)

To ： The Hongkong Electric Co., Ltd.
(Fax No.：2510 7721)

機密
CONFIDENTIAL

證明書
電力裝置無改裝／增設的證明
CONFIRMATION OF NO ALTERATION／ADDITION ON ELECTRICAL INSTALLATION

申請書號碼 ： _____
Application No.

供電地址 ： _____
Service Address

_____

本人證明上述的電力裝置並無任何改裝／增設。
I confirm that there is no alteration / addition on the electrical installation of the above premises.

註冊客戶姓名 ： _____
Name of Registered Customer

電話號碼 ： _____
Telephone No.

註冊客戶簽名／蓋章 ： _____
Registered Customer's Signature /Chop

日期 ： _____
Date

客戶提供個人資料純屬自願性質。所收集的個人資料將會作本公司營運之用，該等資料亦可透露予第三者機構以幫助本公司運作。如客戶不提供所需資料，本公司可能無法提供有關服務。如欲索取私隱政策聲明、查詢、要求查詢及改正個人資料，請瀏覽本公司網頁:www.hkelectric.com、電郵至 personaldata@hkelectric.com、致電 2887 3411、傳真至 2510 7667 或郵寄城市花園道廿八號電燈中心九樓保障個人資料主任收。

The provision of personal data is voluntary. Personal data collected will be used in matters relating to the operations of the Company or may be disclosed to third party organisations which assist in the Company's operation. Failure to provide the data requested may mean that the Company is unable to supply the relevant services. To request a full copy of the Privacy Policy Statement, for enquiry, for data access and correction, please refer to website: www.hkelectric.com, email us at personaldata@hkelectric.com, call us at 2887 3411, fax to 2510 7667 or write to 9/F Electric Centre, 28 City Garden Road for the attention of our Personal Data Protection Officer.

致 ： 香港電燈有限公司
(傳真號碼：2510 7721)

機密
CONFIDENTIAL

To ： The Hongkong Electric Co., Ltd.
(Fax No.：2510 7721)

證明書
「豁免電力裝置」符合有關條例及規例的證明
CONFIRMATION OF COMPLIANCE TO RELEVANT GOVERNMENT ORDINANCES AND REGULATIONS (EXEMPTED INSTALLATION)

申請書號碼 (如適用) ： _____
Application No. (If applicable)

供電地址 ： _____
Service Address

本人證明下列的電力裝置，乃遵照政府的有關條例及規例而完成，並經已完成檢查及測試，及為該裝置接駁電力供應屬於安全。
I certify that the following electrical installation has been completed, inspected and tested in compliance with all relevant Government's Ordinances and Regulations, and that the installation is safe to connect electricity supply.

_____

_____

機構／公司名稱 ： _____
Name of Organization / Company

通 訊 地 址 ： _____
Correspondence Address

_____

負責人姓名 ： _____ 電話號碼： _____
Name of Authorised Person Telephone No.

負責人簽署／公司蓋章 ： _____ 日 期： _____
Authorised Signature / Company Chop Date

客戶提供個人資料純屬自願性質。所收集的個人資料將會作本公司營運之用，該等資料亦可透露予第三者機構以幫助本公司運作。如客戶不提供所需資料，本公司可能無法提供有關服務。如欲索取私隱政策聲明、查詢、要求查詢及改正個人資料，請瀏覽本公司網頁:www.hkelectric.com、電郵至 personaldata@hkelectric.com、致電 2887 3411、傳真至 2510 7667 或郵寄城市花園道廿八號電燈中心九樓保障個人資料主任收。

The provision of personal data is voluntary. Personal data collected will be used in matters relating to the operations of the Company or may be disclosed to third party organisations which assist in the Company's operation. Failure to provide the data requested may mean that the Company is unable to supply the relevant services. To request a full copy of the Privacy Policy Statement, for enquiry, for data access and correction, please refer to website: www.hkelectric.com, email us at personaldata@hkelectric.com, call us at 2887 3411, fax to 2510 7667 or write to 9/F Electric Centre, 28 City Garden Road for the attention of our Personal Data Protection Officer.

致 ： 香港電燈有限公司
(傳真號碼：2510 7721)

機密
CONFIDENTIAL

To ： The Hongkong Electric Co., Ltd.
(Fax No.：2510 7721)

證明書
加大電流需求量的電力裝置的連接
已取得上升總線擁有人同意
CONFIRMATION OF AGREEMENT
FROM OWNER OF RISING MAINS FOR CONNECTION OF
ELECTRICAL INSTALLATION WITH AN INCREASED CURRENT DEMAND

申請書號碼 Application No. ： _____

供電地址 Service Address ： _____

_____

本人現證明已取得上升總線擁有人_____同意，可將上述新電流需求量為 _____ 相 _____ 安培的電力裝置，接駁到上升和橫向總線上。

本人明白，本人必須聘請註冊電業承辦商進行有關工程。如該新電力裝置影響現有電力供應系統的安全和穩定操作，本人須負全責，將其電流需求量改回原來的 _____ 相 _____ 安培。

I confirm that I had obtained the agreement from the owner of the rising mains, _____ for the connection of the above electrical installation with a new current demand of _____Amperes _____ phases to the lateral and rising mains.

I understand that I have to employ a registered electrical contractor to carry out the work, and should the new installation affect the safety and stable operation of the existing power supply system, I am fully responsible for the reinstatement work to revert to its original current demand of _____ Amperes _____phases.

註冊客戶姓名 Name of Registered Customer ： _____ 電話號碼 Telephone No.： _____

註冊客戶簽名／蓋章 Registered Customer's Signature / Chop ： _____ 日期 Date ： _____

注意事項 :

1. 請詳細閱讀背頁『電力 (線路) 規例工作守則』，守則 18。
2. 客戶提供個人資料純屬自願性質。所收集的個人資料將會作本公司營運之用，該等資料亦可透露予第三者機構以幫助本公司運作。如客戶不提供所需資料，本公司可能無法提供有關服務。如欲索取私隱政策聲明、查詢、要求查詢及改正個人資料，請瀏覽本公司網頁:www.hkelectric.com、電郵至 personaldata@hkelectric.com、致電 2887 3411、傳真至 2510 7667 或郵寄城市花園道廿八號電燈中心九樓保障個人資料主任收。

Note:

1. Please read carefully Code 18 of "Code of Practice for The Electricity (Wiring) Regulations" on the back page.
2. The provision of personal data is voluntary. Personal data collected will be used in matters relating to the operations of the Company or may be disclosed to third party organisations which assist in the Company's operation. Failure to provide the data requested may mean that the Company is unable to supply the relevant services. To request a full copy of the Privacy Policy Statement, for enquiry, for data access and correction, please refer to website: www.hkelectric.com, email us at personaldata@hkelectric.com, call us at 2887 3411, fax to 2510 7667 or write to 9/F Electric Centre, 28 City Garden Road for the attention of our Personal Data Protection Officer.

電力(線路)規例工作守則

守則 18　改裝及增設

18A 固定電力裝置改裝或增設的規定

(a) 現有的固定電力裝置若要改裝或增設，負責該項工作的註冊電業工程人員應：
  (i) 按照線路規例的規定進行改裝或增設工作；
  (ii) 證實該項改裝或增設工作絕不會有損現有裝置的安全；及
  (iii) 證實新顏色電線按照附錄 18 的要求安裝。

(b) 為符合上文(a)節的規定，負責的註冊電業工程人員應檢查及確定下列的重要項目：
  (i) 裝置的總電流需求量，在改裝或增設後不應超出允許負載量；
  (ii) 受影響部分的現有電力器具，額定值和狀況都適合及足以應付改裝後的情況；及
  (iii) 受影響部分已因應改裝後的情況，對防止過載、故障電流及危險性對地漏電電流的保護措施作出必要的更改。

(c) 當連接上升總線的裝置須予改裝或增設，而在改裝或增設後該裝置的新訂電流需求量，將超出該裝置在進行改裝或增設工作之前的原有允許負載量，則該裝置擁有人應在進行任何改裝或增設工作前，填寫由供電商提供的「加大電流需求量的電力裝置的連接已取得上升總線擁有人同意證明書」表格，以證實取得上升總線擁有人的同意。

18B 取得供電商的批准

任何人如擬使電力供應增至超出允許負載量的水平，或擬使供電擴大至原定獲供電的房產以外的範圍，在進行任何改裝或增設工作前，應先取得有關供電商的批准。

Code of Practice for The Electricity (Wiring) Regulations

Code 18 ALTERATIONS AND ADDITIONS

18A Requirements for Alterations or Additions to a Fixed Installation

(a) For any alteration or addition to an existing fixed installation, the registered electrical worker responsible for the work should:
  (i) carry out the alteration or addition in compliance with the Wiring Regulations,
  (ii) verify that the alteration or addition does not impair in any way the safety of the existing installation, and
  (iii) verify that new colour cables are installed in compliance with the requirements in Appendix 18.

(b) For the purposes of subparagraph (a) above, the following essential items should be checked and ascertained by the responsible registered electrical worker：
  (i) the total current demand for the installation after the alteration or addition should not exceed the approved loading;
  (ii) the ratings and the conditions of the existing electrical equipment of the affected parts are suitable and adequate for the altered circumstances, and
  (iii) the protection against overcurrent, earth fault currents and dangerous earth leakage currents for the affected parts is altered as necessary for the altered circumstances.

(c) In the case of an alteration or addition to an installation which is connected to rising mains, the owner of the installation should, before commencing any alteration or addition, obtain agreement from the owner of the rising mains by completing form "Confirmation of Agreement from Owner of Rising Mains for Connection of Electrical Installation with an Increased Current Demand" provided by Electricity Supplier if the new current demand of the installation after the alteration or the addition will exceed the existing approved loading before the alteration or addition is carried out on the installation.

18B Approval from the Electricity Supplier

Any person who wishes to have his electricity supply increased over and above the approved loading, or extended beyond the premises to which the supply is originally intended, should obtain prior approval from the electricity supplier concerned before any alteration or addition is carried out.

致 ： 香港電燈有限公司
(傳真號碼：2510 7721)

機密
CONFIDENTIAL

To ： The Hongkong Electric Co., Ltd.
(Fax No.：2510 7721)

允許負載量的查詢
APPROVED LOADING ENQUIRY

請提供下列客戶／公用*裝置的允許負載量：-
Please advise the approved loading of the following customer's/communal* installation：-

賬戶號碼 Account No. ：_____

供電地址 Service Address ：_____

現有／計劃*總開關額定值：_____安培 單相／三相*
Existing/Proposed* Main Switch Rating：_____ Amp. 1-Phase/3-Phase*

現附上顯示客戶總開關及連接公用裝置／貴公司供電設備的線路圖以供參照。
Schematic wiring diagram showing the connection between customer's main switch and the communal installation / your Company's apparatus is attached for reference.

註冊客戶／負責人*姓名 Name of Registered Customer / the Authorised Person* ：_____

通訊地址 Correspondence Address ：_____
_____

傳真機號碼 Fax. No. ：_____

聯絡電話 Contact Tel. No. ：_____

註冊客戶／負責人*簽名 Registered Customer's/ Authorised* Signature ：_____

*請刪去不適用項目 Delete as appropriate

客戶提供個人資料純屬自願性質。所收集的個人資料將會作本公司營運之用，該等資料亦可透露予第三者機構以幫助本公司運作。如客戶不提供所需資料，本公司可能無法提供有關服務。如欲索取私隱政策聲明、查詢、要求查詢及改正個人資料，請瀏覽本公司網頁:www.hkelectric.com、電郵至 personaldata@hkelectric.com、致電 2887 3411、傳真至 2510 7667 或郵寄城市花園道廿八號電燈中心九樓保障個人資料主任收。

The provision of personal data is voluntary. Personal data collected will be used in matters relating to the operations of the Company or may be disclosed to third party organisations which assist in the Company's operation. Failure to provide the data requested may mean that the Company is unable to supply the relevant services. To request a full copy of the Privacy Policy Statement, for enquiry, for data access and correction, please refer to website: www.hkelectric.com, email us at personaldata@hkelectric.com, call us at 2887 3411, fax to 2510 7667 or write to 9/F Electric Centre, 28 City Garden Road for the attention of our Personal Data Protection Officer.

檔案編號 Ref. No._____ 日期 Date: _____

致 To:

上述裝置的允許負載量為 _____安培 單相/ 三相 (該允許負載量須得到大廈業主/業主立案法團/管理處的同意)。如有任何查詢，請致電: _____ 與我們的 _____ 聯絡。

The approved loading of the above installation is_____Amp. 1-phase/3-phase subject to the consent of the Landlord/Incorporated Owner/Management Office of the building. Should you have any queries, please contact our _____at telephone No. _____.

致 ： 香港電燈有限公司
(傳真號碼：2510 7721)

機密
CONFIDENTIAL

To ： The Hongkong Electric Co., Ltd.
(Fax No.：2510 7721)

申請代註冊客戶繳交服務費
REQUEST FOR PAYMENT OF SERVICE CHARGES ON BEHALF OF THE REGISTERED CUSTOMER

申請書號碼 ： _____
Application No.

供電地址 ： _____
Service Address

本人同意代註冊客戶繳交上述供電申請的所有服務費。
We agree to pay all service charges for the above application on behalf of the registered customer.

公司名稱 ： _____
Company Name

商業登記號碼 ： _____
Business Registration No.

通訊地址 ： _____
Corresponding Address

負責人姓名 ： _____ 電話號碼： _____
Name of Authorised Person Telephone No.

負責人簽署／公司蓋章 ： _____ 日期： _____
Authorised Signature / Co. Chop Date

客戶提供個人資料純屬自願性質。所收集的個人資料將會作本公司營運之用，該等資料亦可透露予第三者機構以幫助本公司運作。如客戶不提供所需資料，本公司可能無法提供有關服務。如欲索取私隱政策聲明、查詢、要求查詢及改正個人資料，請瀏覽本公司網頁:www.hkelectric.com、電郵至 personaldata@hkelectric.com、致電 2887 3411、傳真至 2510 7667 或郵寄城市花園道廿八號電燈中心九樓保障個人資料主任收。

The provision of personal data is voluntary. Personal data collected will be used in matters relating to the operations of the Company or may be disclosed to third party organisations which assist in the Company's operation. Failure to provide the data requested may mean that the Company is unable to supply the relevant services. To request a full copy of the Privacy Policy Statement, for enquiry, for data access and correction, please refer to website: www.hkelectric.com, email us at personaldata@hkelectric.com, call us at 2887 3411, fax to 2510 7667 or write to 9/F Electric Centre, 28 City Garden Road for the attention of our Personal Data Protection Officer.

致 ： 香港電燈有限公司
(傳真號碼：2510 7721)

機密
CONFIDENTIAL

To ： The Hongkong Electric Co., Ltd.
(Fax No.：2510 7721)

電表計量點不接近電源
METERING POINT NOT CLOSE TO SOURCE OF SUPPLY

申請書號碼 ： _____
Application No.

供電地址 ： _____
Service Address

_____

由於現有電掣房缺乏空間，計電儀器不能安裝於靠近電源位置。

我們（業主/業主立案法團/管理處*）於現有電掣房至新電表位置之間，安裝了獨立上升總線。我們願意承擔保養及維修該上升總線的全部責任，並確保沒有其他人士於該上升總線引出無電表計量的橫向電線。

我們清楚明白貴公司的規定，但希望以上的特別情況能取得貴公司的個別許可。

Owing to space shortage in the existing switch room, tariff metering equipment cannot be installed close to the source of supply.

We (Landlord/Incorporated Owners/Management Office*) have installed a dedicated riser from the existing switch room to the new metering position. We are fully responsible for the repair & maintenance of the riser and ensure that there is no unmetered tee-off to other parties. We fully understand your requirements and would appreciate your concession in view of the circumstances in this particular instance.

負責人姓名 ： _____
Name of Authorised Person

電話號碼 ： _____
Telephone No.

業主/業主立案法團/管理處*
簽名/蓋章 ： _____
Landlord/Incorporated Owners/
Management Office * Signature/chop

日期 ： _____
Date

＊請刪去不適用項目 Delete as appropriate

客戶提供個人資料純屬自願性質。所收集的個人資料將會作本公司營運之用，該等資料亦可透露予第三者機構以幫助本公司運作。如客戶不提供所需資料，本公司可能無法提供有關服務。如欲索取私隱政策聲明、查詢、要求查詢及改正個人資料，請瀏覽本公司網頁:www.hkelectric.com、電郵至 personaldata@hkelectric.com、致電 2887 3411、傳真至 2510 7667 或郵寄城市花園道廿八號電燈中心九樓保障個人資料主任收。

The provision of personal data is voluntary. Personal data collected will be used in matters relating to the operations of the Company or may be disclosed to third party organisations which assist in the Company's operation. Failure to provide the data requested may mean that the Company is unable to supply the relevant services. To request a full copy of the Privacy Policy Statement, for enquiry, for data access and correction, please refer to website: www.hkelectric.com, email us at personaldata@hkelectric.com, call us at 2887 3411, fax to 2510 7667 or write to 9/F Electric Centre, 28 City Garden Road for the attention of our Personal Data Protection Officer.

致 ： 香港電燈有限公司
(傳真號碼：2510 7721)

機密
CONFIDENTIAL

To ： The Hongkong Electric Co., Ltd.
(Fax No.：2510 7721)

申請裝設監察電表作耗電計量用途
APPLICATION FOR INSTALLATION OF CHECK METER(S) FOR CONSUMPTION MONITORING PURPOSE

申請書號碼 ： _____
Application No.

供電地址 ： _____
Service Address

_____

本人現證明裝設在上址的監察電表只作耗電計量用途，並且不會將取自貴公司之電力轉售予第三者。

This is to confirm that the check meter(s) installed at the above address is for consumption monitoring purpose and electricity obtained from your Company will not be re-sold to third party.

註冊客戶姓名 ： _____
Name of Registered Customer

電話號碼 ： _____
Telephone No.

註冊客戶簽名／蓋章 ： _____
Registered Customer's Signature/Chop

日期 ： _____
Date

客戶提供個人資料純屬自願性質。所收集的個人資料將會作本公司營運之用，該等資料亦可透露予第三者機構以幫助本公司運作。如客戶不提供所需資料，本公司可能無法提供有關服務。如欲索取私隱政策聲明、查詢、要求查詢及改正個人資料，請瀏覽本公司網頁:www.hkelectric.com、電郵至 personaldata@hkelectric.com、致電 2887 3411、傳真至 2510 7667 或郵寄城市花園道廿八號電燈中心九樓保障個人資料主任收。

The provision of personal data is voluntary. Personal data collected will be used in matters relating to the operations of the Company or may be disclosed to third party organisations which assist in the Company's operation. Failure to provide the data requested may mean that the Company is unable to supply the relevant services. To request a full copy of the Privacy Policy Statement, for enquiry, for data access and correction, please refer to website: www.hkelectric.com, email us at personaldata@hkelectric.com, call us at 2887 3411, fax to 2510 7667 or write to 9/F Electric Centre, 28 City Garden Road for the attention of our Personal Data Protection Officer.

致 ： 香港電燈有限公司
(傳真號碼：2510 7721)

To ： The Hongkong Electric Co., Ltd.
(Fax No.：2510 7721)

機密
CONFIDENTIAL

申請用電模式監察服務
APPLICATION FOR ACCOUNT MONITORING SERVICE

請為下列賬戶提供用電模式監察服務：
Please provide Account Monitoring Service for the following account(s):

賬戶號碼：
Account No.: _____

供電地址：
Service Address: _____

本人 / 本公司願意承擔此項服務的一切費用。
We undertake to pay the charges arising out of this service.

☐ 請將費用加在賬戶號碼：
Please add the charge to Account No.: _____

☐ 申請人負責繳費
Please debit the Applicant in due course.

商業登記註冊號碼：
Business Registration No.: _____

申請人 /
註冊客戶姓名：
Applicant Name /
Name of
Registered
Customer: _____

聯絡電話：
Contact Telephone No.: _____

通訊地址：
Correspondence
Address: _____

日期：
Date: _____

申請人 / 註冊客戶簽名 /
蓋章
Applicant / Registered
Customer's Signature /
Chop _____

注意事項 :
1. 請在適當方格內加上（✓）號
2. 請詳細閱讀背頁 。
3. 客戶提供個人資料純屬自願性質。所收集的個人資料將會作本公司營運之用，該等資料亦可透露予第三者機構以幫助本公司運作。如客戶不提供所需資料，本公司可能無法提供有關服務。如欲索取私隱政策聲明、查詢、要求查詢及改正個人資料，請瀏覽本公司網頁:www.hkelectric.com、電郵至 personaldata@hkelectric.com、致電 2887 3411、傳真至 2510 7667 或郵寄城市花園道廿八號電燈中心九樓保障個人資料主任收。

Notes:
1. Tick box where appropriate (✓)
2. Please read carefully on the back page.
3. The provision of personal data is voluntary. Personal data collected will be used in matters relating to the operations of the Company or may be disclosed to third party organisations which assist in the Company's operation. Failure to provide the data requested may mean that the Company is unable to supply the relevant services. To request a full copy of the Privacy Policy Statement, for enquiry, for data access and correction, please refer to website: www.hkelectric.com, email us at personaldata@hkelectric.com, call us at 2887 3411, fax to 2510 7667 or write to 9/F Electric Centre, 28 City Garden Road for the attention of our Personal Data Protection Officer.

申請人注意事項 ：

1. 選用「最高負荷供電」收費是否較便宜，將視乎客戶電力裝置的負荷因數。再者，天氣變化、商業活動的性質及營運情況、生產量、季節性的需求或其他因素也可能影響電力裝置的最高負荷。一般而言，若電力裝置長時間內有較高的耗電量，及其使用模式能保持穩定，是較有機會受惠於「最高負荷供電」收費。否則，「最高負荷供電」收費可能較「非住宅供電」收費為高。因此，在決定申請「最高負荷供電」收費前，應進行有關評估，以確保「最高負荷供電」收費對客戶有利。

2. 用電模式監察服務將每月為客戶的賬戶提供以下資料，為期三個月：

   a. 最高負荷（千伏安）
   b. 耗電量（千瓦時）
   c. 根據「最高負荷供電」價目的收費
   d. 根據「非住宅供電」價目的收費

3. 有需要到現場進行電表工作。

4. 有關賬戶將維持採用「非住宅供電」收費，直至港燈收到及同意客戶的申請將賬戶由「非住宅供電」收費轉為「最高負荷供電」收費。

Notes to Applicant:

1. In general, whether Maximum Demand Tariff is beneficial or not depends on the load factor of customer's electrical installation and on some occasions, on the climate, the business activity level and its nature, the production output, seasonal demands or other reasons. Under normal circumstances, Maximum Demand Tariff would be beneficial if the electricity consumption is significant and used continuously for a long period of time with a more or less evenly distributed consumption pattern. It is possible that the electricity charge could be higher under Maximum Demand Tariff than Non-Residential Tariff. Therefore, customer should conduct maximum demand measurement / monitoring of his/her installation to ascertain the advantages and disadvantages of Maximum Demand Tariff before applying for Maximum Demand Tariff.

2. Under our Account Monitoring Service, we will arrange to provide the following information monthly for customer's account(s) for a period of three months:

   a. Maximum Demand (kVA)
   b. Consumption (kWh)
   c. Charge at Maximum Demand Tariff
   d. Charge at Non-Residential Tariff

3. On site metering work is required.

4. The concerned account(s) will remain to be charged under Non-Residential Tariff until customer's decision to change from Non-Residential Tariff to Maximum Demand Tariff has been received and agreed by us.

致： 香港電燈有限公司
(傳真號碼：2510 7721)

To： The Hongkong Electric Co., Ltd.
(Fax No.：2510 7721)

機密
CONFIDENTIAL

申請非辦公時間內進行電表工作
REQUEST FOR NON-OFFICE HOUR METERING WORK

電表號碼 Meter No. ：_____ 申請書號碼 (如適用) Application No. (If applicable)：_____

暫定時間** Tentative Time ：由 From：_____ 至 To：_____

暫定日期** Tentative Date ：_____

** 須由港燈確認 To be confirmed by HK Electric

供電地址 Service Address ：_____

_____

申請理由 Reason for Request ：_____

本人／本公司願意承擔此非辦公時間的服務費用。
We undertake to pay the charges arising out of this non-office hour service.

客戶姓名／承辦商名稱 Name of Customer/Contractor ：_____

商業登記號碼 (如適用) Business Registration No. (If applicable) ：_____

通訊地址 Correspondence Address ：_____

_____

負責人姓名 Name of Authorised Person ：_____ 電話號碼 Telephone No.：_____

負責人簽署／公司蓋章 Authorised Signature / Company Chop ：_____ 日期 Date：_____

客戶提供個人資料純屬自願性質。所收集的個人資料將會作本公司營運之用，該等資料亦可透露予第三者機構以幫助本公司運作。如客戶不提供所需資料，本公司可能無法提供有關服務。如欲索取私隱政策聲明、查詢、要求查詢及改正個人資料，請瀏覽本公司網頁:www.hkelectric.com、電郵至 personaldata@hkelectric.com、致電 2887 3411、傳真至 2510 7667 或郵寄城市花園道廿八號電燈中心九樓保障個人資料主任收。

The provision of personal data is voluntary. Personal data collected will be used in matters relating to the operations of the Company or may be disclosed to third party organisations which assist in the Company's operation. Failure to provide the data requested may mean that the Company is unable to supply the relevant services. To request a full copy of the Privacy Policy Statement, for enquiry, for data access and correction, please refer to website: www.hkelectric.com, email us at personaldata@hkelectric.com, call us at 2887 3411, fax to 2510 7667 or write to 9/F Electric Centre, 28 City Garden Road for the attention of our Personal Data Protection Officer.

To： The Hongkong Electric Co., Ltd.
(Fax No.：2814 3275)

CONFIDENTIAL

REQUEST FOR TEMPORARY SHUTDOWN OF SUPPLY

Affected Address : _____

HK Electric Supply Number :SN_____ ☐ L.V. Service Cutout ☐ Transformer ☐ H.V. Supply (See remark)

Requested Shutdown Period :

From _____ / _____ To _____ / _____
Time Date Time Date

Application No.: _____ (if any) Meter No.: _____ (if any) Shutdown for Maintenance Work ☐ Yes ☐ No

I undertake to pay all charges arising out of the service and declare that the approved loading of the installation will not be altered without your Company's prior approval.

I have obtained consent from all tenants affected and will display notice accordingly.

Applicant's Name : Mr. / Ms. _____

Company Name : _____

Contact Tel. No.: _____

Email Address : _____

Date : _____

Applicant's Signature & Company Chop:

(Must be provided)

Postal Address : _____

☐ Please add the charge to Account No.: _____

☐ Please debit the Applicant in due course Business Registration No.: _____

Consent from Building Owner / Management Authority

[ ] Contractor appointed by building owner / management authority

[ ] Building owner / landlord

[ ] Building management authority

Building Owner's / Management Authority's Signature & Chop

(Must be provided)

NOTES TO APPLICANT

1. This form shall be duly completed and returned to 9/F, Electric Centre, North Point, Hong Kong, or by FAX NO. 2814 3275 at least two weeks before the shutdown date. For enquiry, please call telephone No. 2814 3421.
2. In addition to building owner / management authority, consent should be obtained from all affected tenants who obtain electricity supply from the above HK Electric supply number and a copy of such is attached to this form.
3. Please note that the requested shutdown is subject to our confirmation of acceptance. Although we will endeavour to satisfy the customer's request as far as possible, the requested shutdown may have to be re-scheduled if circumstances require. **In any circumstances, you must not start work until you have received confirmation from our site engineer on site that the electricity supply has been isolated.**
4. Upon receipt of the shutdown request form, HK Electric will send a shutdown serial no. to the email address provided by the applicant. The applicant should quote this shutdown serial no. to facilitate subsequent enquiries concerning this application.
5. Pursuant to Regulations 19 and 20 of the Electricity (Wiring) Regulations, a Certificate shall be prepared and signed by a registered electrical worker of appropriate grade certifying that the installation complies with the Electricity Ordinance. Prior to restoration of supply, the registered electrical worker shall be present at site and a copy of the duly completed Certificate prescribed by the Government shall be provided to HK Electric as stipulated in our Supply Rules.
6. If changes are to be made to the metering arrangements or the installation during shutdown maintenance, the customer shall inform HK Electric before the shutdown.
7. If there are no changes in metering arrangements or alteration to the installation during shutdown maintenance, the customer shall make a declaration to that effect to HK Electric before restoration of supply.
8. The provision of personal data is voluntary. Personal data collected will be used in matters relating to the operations of the Company or may be disclosed to third party organisations which assist in the Company's operation. Failure to provide the data requested may mean that the Company is unable to supply the relevant services. To request a full copy of the Privacy Policy Statement, for enquiry, for data access and correction, please refer to website: www.hkelectric.com, email us at personaldata@hkelectric.com, call us at 2887 3411, fax to 2510 7667 or write to 9/F Electric Centre, 28 City Garden Road for the attention of our Personal Data Protection Officer.

Remark: Tick box where appropriate (✓)

香港電燈有限公司

THE HONGKONG ELECTRIC CO., LTD.

CONFIDENTIAL

Supply Number Details

Please assist us to speed up the work in processing your application by completing the details below.

This form is NOT applicable to applicants in squatter area, cottage area, Lamma Island village houses, new Building supply, and construction site supply.

This form is to be completed by the Registered Electrical Worker for:-

(a) Applications in existing building where electricity supply is already available; and

(b) Additional Load Application with main switch rating being 3-phase and capacity equal to or exceeding 60 Ampere; or
New Application in residential premises with main switch rating being 3-phase and capacity exceeding 100 Ampere; or
New Application in non-residential premises with main switch rating being 3-phase and capacity equal to or exceeding 100 Ampere.

The SN number can be easily found on site. It is marked on the external front cover of HK Electric's service cutout, or fixed onto the exposed surface of HK Electric's service cable or marked on the external front cover of customer's main incomer switch. It is NOT necessary to interfere HK Electric's apparatus to read the SN number.

You may send this form to Fax No. 2843 3163

For enquiry, please call Tel. No.
2843 3164（Central Area）;
2843 3105（Eastern Area）;
2843 3108（Western Area）

To : The Hongkong Electric Co., Ltd., Hongkong Electric Centre, 44 Kennedy Road, Hong Kong.
Attn : Chief Distribution Planning Engineer (Central / Eastern / Western)

Application No.：_____

Supply Address：_____

☐ For Additional Load Application

I confirm that existing installation is supplied via HK Electric's supply point No. SN _____

I propose the installation after the additional load to be supplied via HK Electric's supply point No. SN _____

I understand that it is the applicant's responsibility to obtain approval by the owner of the communal installation in accordance with 18A(c) of Code of Practice for the Electricity (Wiring) Regulations for the above proposed connection.

A schematic diagram indicating the applicant's existing connection and proposed connection to the communal installation is attached for your reference.

☐ For New Application

I propose the new installation to be supplied via HK Electric's supply point No. SN _____

I understand that it is the applicant's responsibility to obtain approval by the owner of the communal installation in accordance with 18A(c) of Code of Practice for the Electricity (Wiring) Regulations for the above proposed connection.

A schematic diagram indicating the applicant's proposed connection to the communal installation is attached for your reference.

Remarks by the Registered Electrical Worker:

_____

_____

Signature & Name of
Registered Electrical Worker：_____ (_____)

Registration No. : _____

Contact Tel./Pager No.：_____ Date：_____

The provision of personal data is voluntary. Personal data collected will be used in matters relating to the operations of the Company or may be disclosed to third party organisations which assist in the Company's operation. Failure to provide the data requested may mean that the Company is unable to supply the relevant services. To request a full copy of the Privacy Policy Statement, for enquiry, for data access and correction, please refer to website: www.hkelectric.com, email us at personaldata@hkelectric.com, call us at 2887 3411, fax to 2510 7667 or write to 9/F Electric Centre, 28 City Garden Road for the attention of our Personal Data Protection Officer.

APPENDIX B

USEFUL TELEPHONE NUMBERS

Service Centre/Department	Phone No.
A) Customer Centre	
- Telephone Enquiry	2887 3411
- Account-by-Phone Service	2887 3466
- Fax	2510 7667
- SMS Enquiry Service	6681 3411
B) Customer Installation Department	
- Installation Inspection, Meter Installation and Technical Enquiries	2887 3455
- Electricity-by-Phone Service	2887 3838
- Fax	2510 7721
C) Distribution Planning Department (Design)	
- Eastern	2843 3105
- Central	2843 3164
- Western	2843 3108
D) Construction & Maintenance Department (Implementation)	
- Customer Services Representative	2814 3443
E) Customer Emergency Services Centre (24-hour service)	
- Telephone (Cantonese)	2555 4999
(English)	2555 4000
- Fax	2555 6637
- SMS Enquiry Service	6681 3411
F) Emergency Services Unit	2510 2904

APPENDIX C
HK ELECTRIC DISTRICT BOUNDARIES

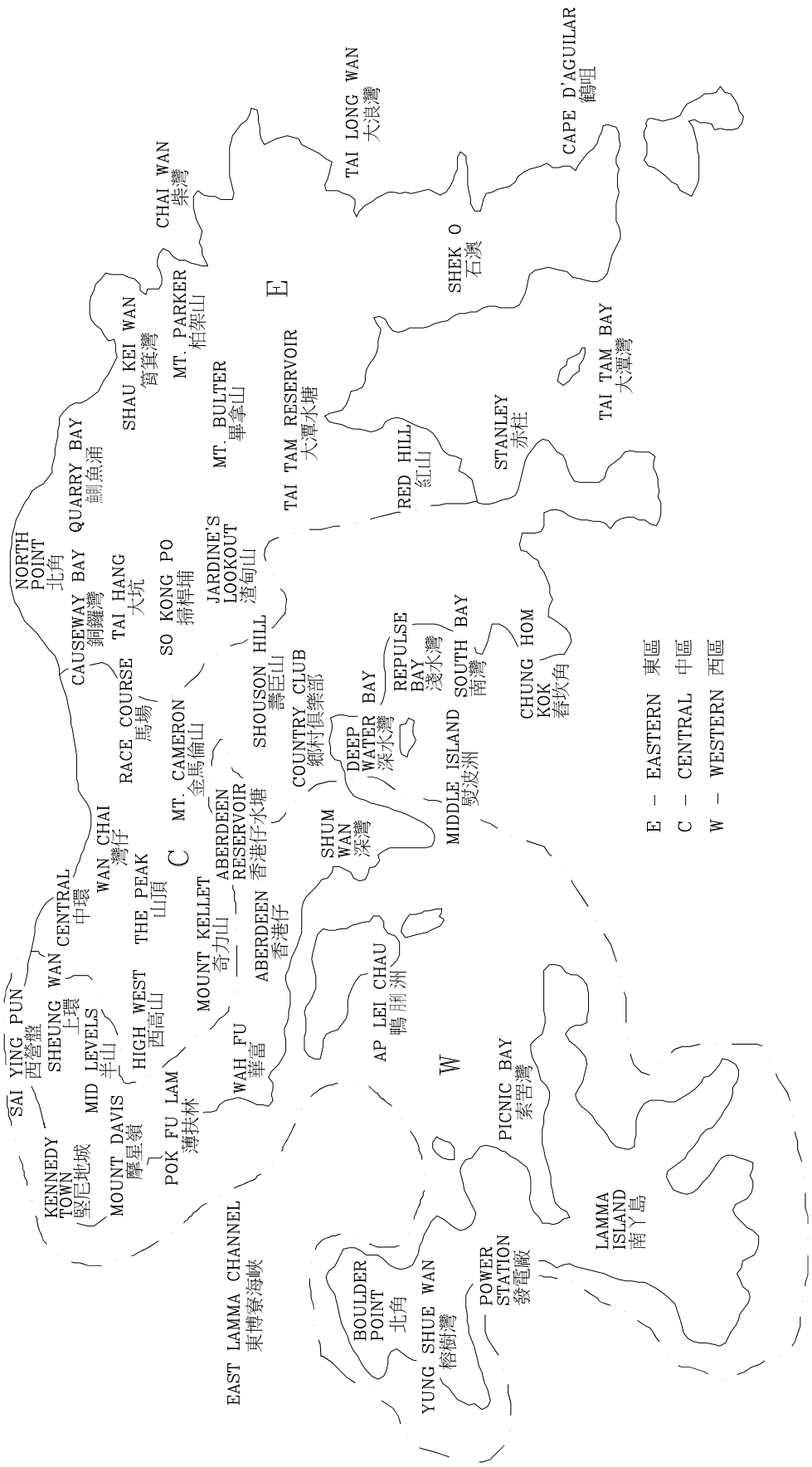

The Hongkong Electric Co., Ltd.
44 Kennedy Road, Hong Kong
www.hkelectric.com